NOTES:
1. MATERIALS AND FINISHES(PLATING THICKNESS IN MICRO-INCHES):
   BODY – BRASS, GOLD PLATING(.000010" MIN.)
   CONTACT – BRASS, GOLD PLATING(.000030" MIN.)
   INSULATOR – PTFE
2. ELECTRICAL:
   A. IMPEDANCE: 50 OHM
   B. FREQUENCY RANGE: DC 0–4 GHz
   C. VSWR(RETURN LOSS): 1.2 (20.83 dB), MAX.
   D. DIELECTRIC WITHSTANDING VOLTAGE: 1000 VRMS, MIN.
3. MECHANICAL:
   A. DURABILITY: 500 CYCLES MIN.
   B. TEMPERATURE RANGE: – 65°C to +165°C
4. CRIMPED FERRULE
   HEX CRIMP SIZE .128"
5. CRIMPED CONTACT PIN
   SQ. CRIMP SIZE 0.7(mm)

THIRD ANGLE PROJ.

REVISIONS

REV	DESCRIPTION	DATE	ECO	APPR
A	RELEASE TO MFG.			
A1	SEE SHEET 1	24–Mar–05		SH
C	SEE SHEET 1	17–Mar–09	47509	SH

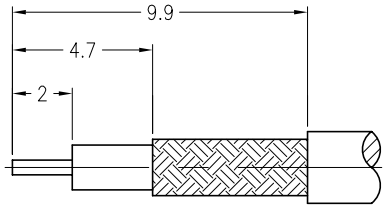

RECOMMENDED
CABLE STRIPPING DIM'S

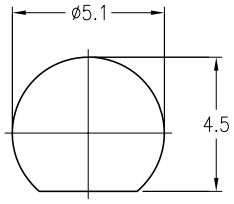

RECOMMENDED
MOUNTING HOLE

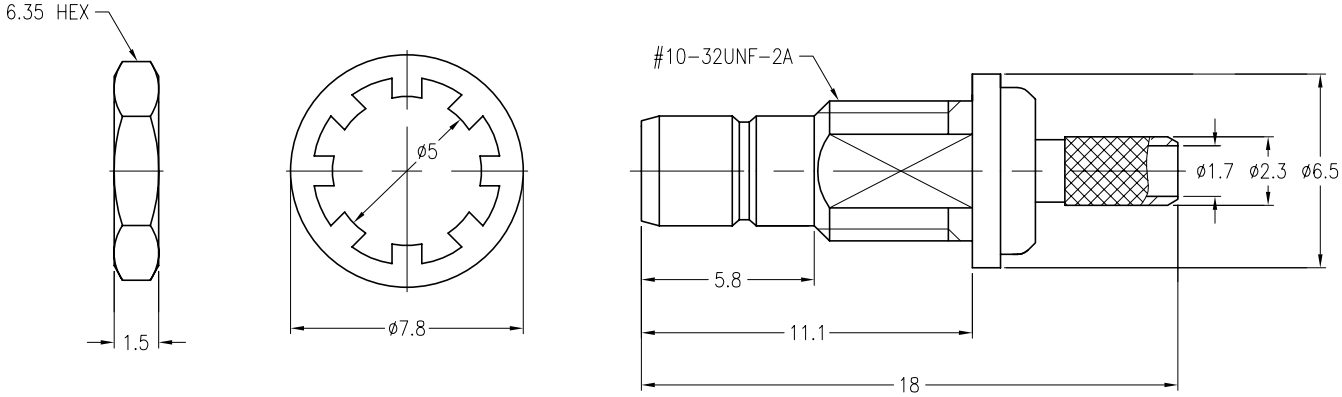

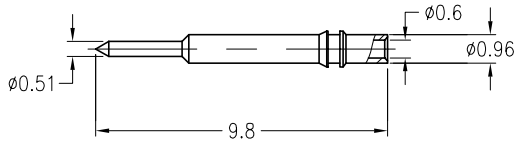

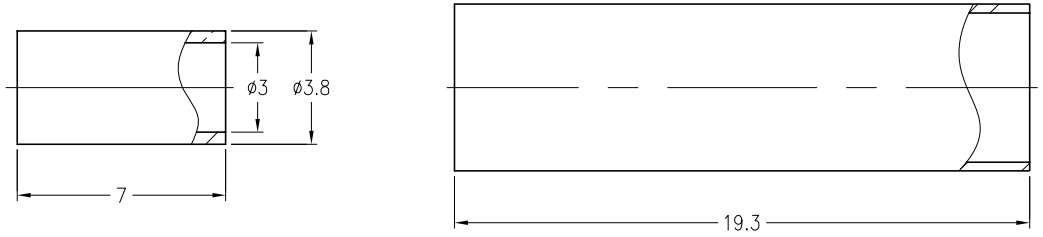

CUSTOMER OUTLINE DRAWING

ALL OTHER SHEETS ARE FOR INTERNAL USE ONLY

UNLESS OTHERWISE SPECIFIED, DIMENSIONS ARE IN METRIC AND TOLERANCES ARE:

0.5 – 6mm	6 – 30mm	30 – 120mm	ANGLES
±0.1mm	±0.2mm	± 0.3mm	±1°

NOTICE – These drawings, specifications, or other data (1) are, and remain the property of Amphenol Corp. (2) must be returned upon request; and (3) are confidential and not to be disclosed to any person other than those to whom they are given by Amphenol Corp. The furnishing of these drawings, specifications, or other data by Amphenol Corp., or to any other person to anyone for any purpose is not to be regarded by implication or otherwise in any manner licensing, granting rights or permitting such holder or any other person to manufacture, use or sell any product, process or design, patented or otherwise, that may in any way be related to or disclosed by said drawings, specifications, or other data.

MATERIAL

REFERENCE

FINISH

DRAWN J.YANG DATE 24–Mar–05

ENGINEER S.HSIEH DATE 24–Mar–05

APPROVED S.HSIEH DATE 24–Mar–05

CAD FILE F:\DWG\SMB\1421A1\316U–50\10GT30G–CSZ

TITLE SMB BULKHEAD CRIMP JACK (FOR RG–174/U,188A/U,316/U)

SCALE: 4/1 | SHEET 2 OF 2 | DWG SIZE B | CODE ID 74868 | REV C

Amphenol RF
Danbury CT USA, Tainan Taiwan, Shenzhen China
www.amphenolrf.com

DRAWING NO. SMB1421A1–10GT30G–316U–50

ITEM NO. 121421AAA36GM5F

PART NO. 903–505J–51S