Apr.1.2017 Copyright 2017 HIROSE ELECTRIC CO., LTD. All Rights Reserved.

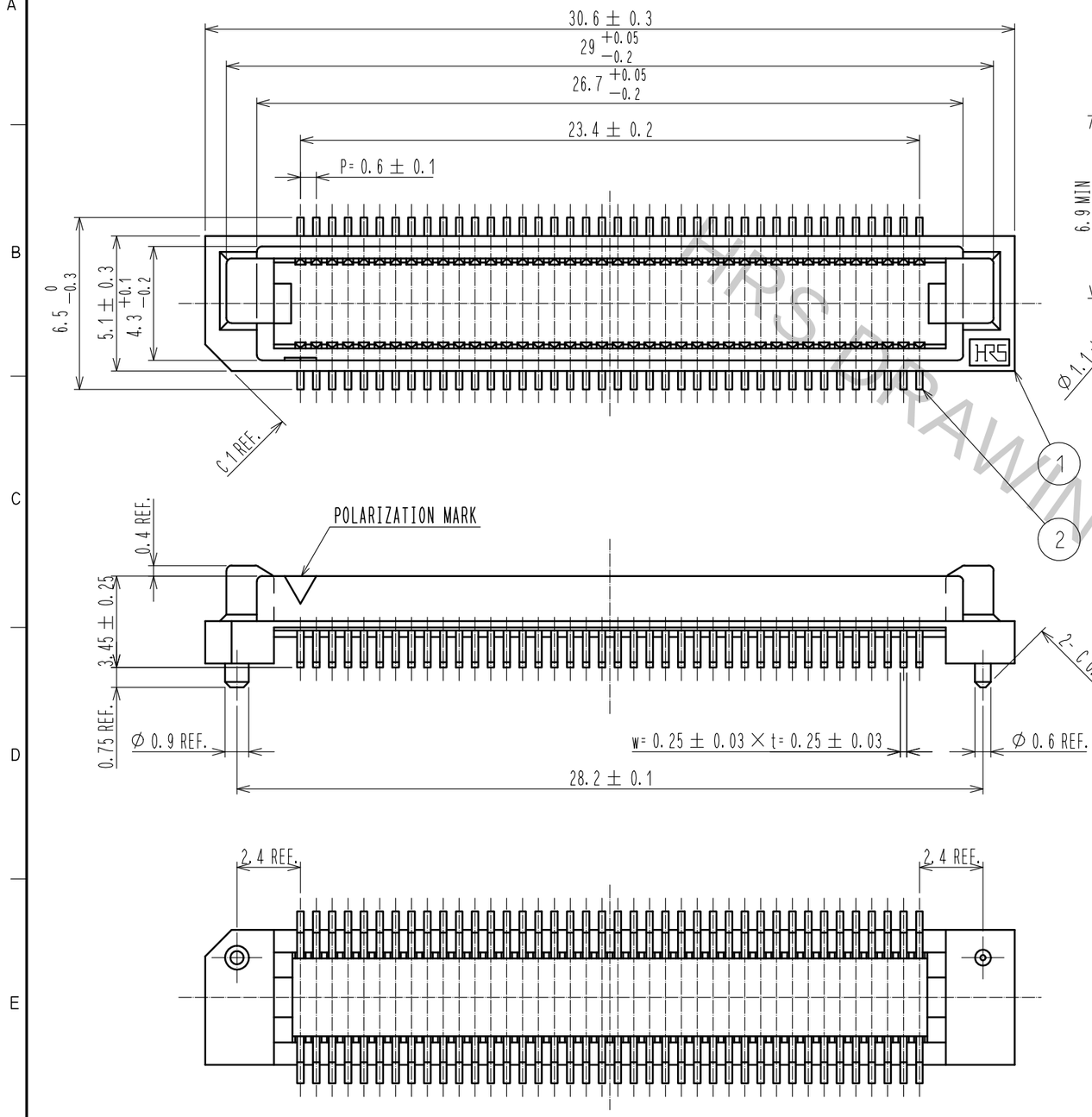

RECOMMENDED LAND PATTERN DIMENSION OF PCB

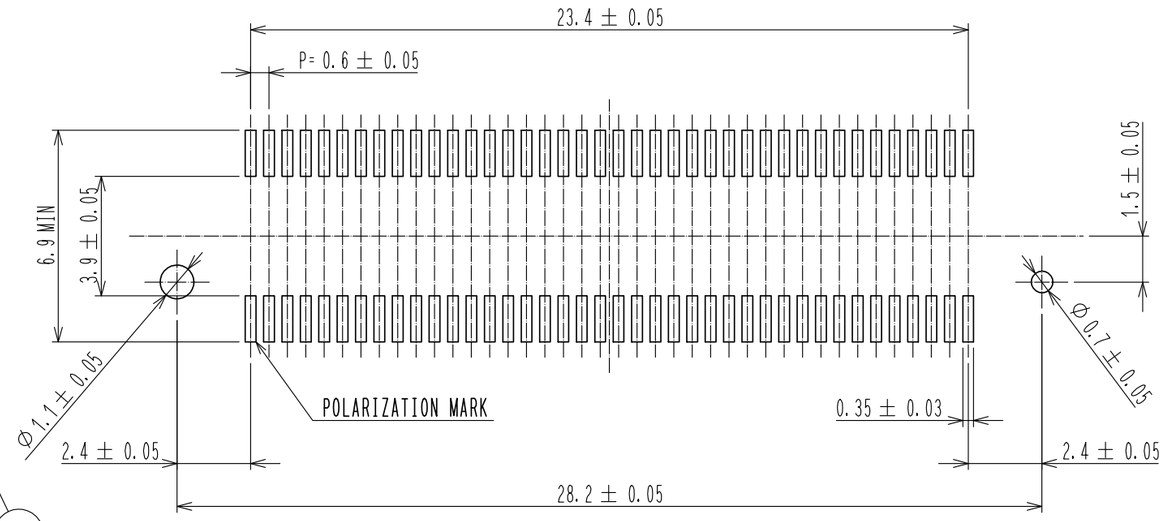

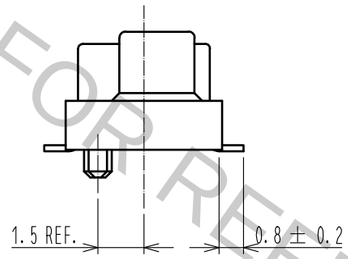

HRS DRAWING FOR REFERENCE

NO.	MATERIAL	FINISH . REMARKS
1	PPS	LIGHT BROWN. UL94V-0
2	PHOSPHOR BRONZE	CONTACT: GOLD PLATING 0.1μm MIN LEAD : TIN PLATING 1μm MIN UNDER :NICKEL PLATING 1μm MIN
3	PVC	TUBE
4	PVC	CAP

NOTE
1. SMT LEAD-COPLANARITY:0.1 MAX.
2. TUBE PACKAGE IS APPLIED FOR THIS PRODUCT.
   PLEASE REFER TO THE SHEET 2/2 FOR THE DETAILS.
3. FOR MODIFICATION.ETC.,PREVENTIVE HOLE FOR SINK MARK MAY BE ADDED ACCORDING TO CIRCUMSTANCES.

UNITS	SCALE	COUNT	DESCRIPTION OF REVISIONS	DESIGNED	CHECKED	DATE
mm	5:1	0				

HIROSE ELECTRIC CO., LTD.

APPROVED	NH. NAKATA	16.11.21
CHECKED	HT. YAMAGUCHI	16.11.21
DESIGNED	MT. ITANO	16.11.21
DRAWN	MT. ITANO	16.11.21

DRAWING NO. EDC-150737-91-00
PART NO. FX8-80P-SV1(91)
CODE NO. CL578-0043-6-91
0 1/2

FORM HC0011-5-7

Apr.1.2017 Copyright 2017 HIROSE ELECTRIC CO., LTD. All Rights Reserved.

DRAWING FOR PACKING(FREE)

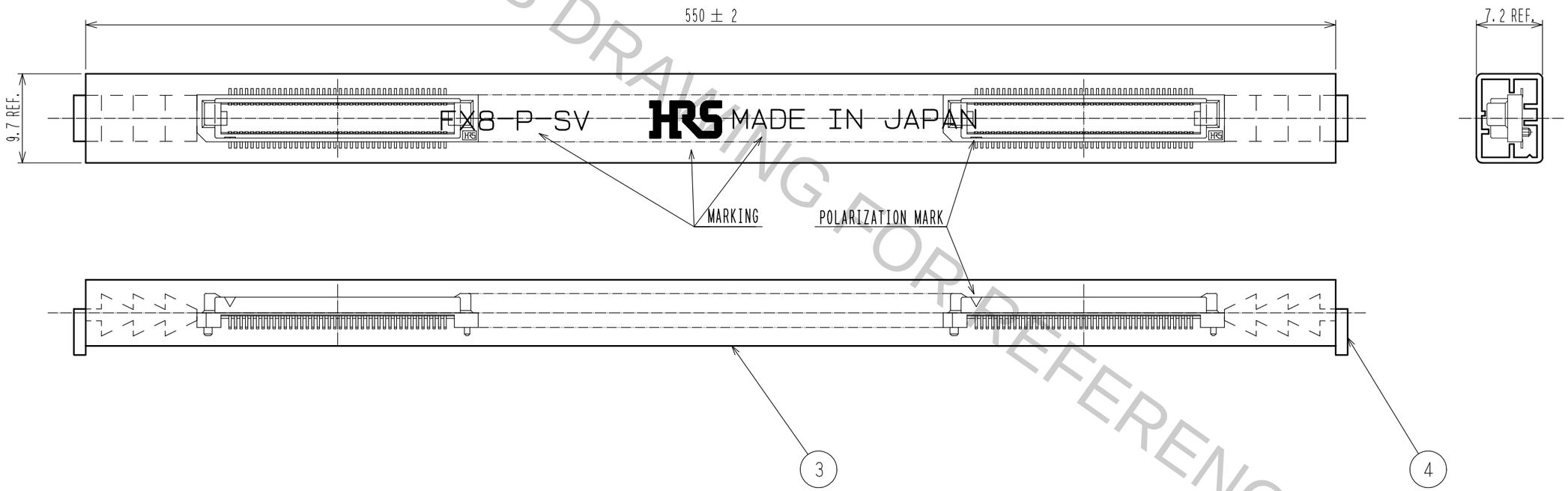

HRS DRAWING FOR REFERENCE

NOTE 4. 1TUBE : 17CONNECTORS.

HRS	DRAWING NO.	EDC-150737-91-00
	PART NO.	FX8-80P-SV1(91)
	CODE NO.	CL578-0043-6-91

0 2/2

FORM HC0011-5-8