THIS DRAWING IS UNPUBLISHED. RELEASED FOR PUBLICATION ,19 .
© COPYRIGHT 19 BY AMP INCORPORATED. ALL RIGHTS RESERVED.

| LOC | DIST |
|---|---|
| AD | 00 |

REVISIONS

| P | LTR | DESCRIPTION | DATE | DWN | APVD |
|---|---|---|---|---|---|
| | O | NEW RELEASE | 1SEPT99 | MM | SG |

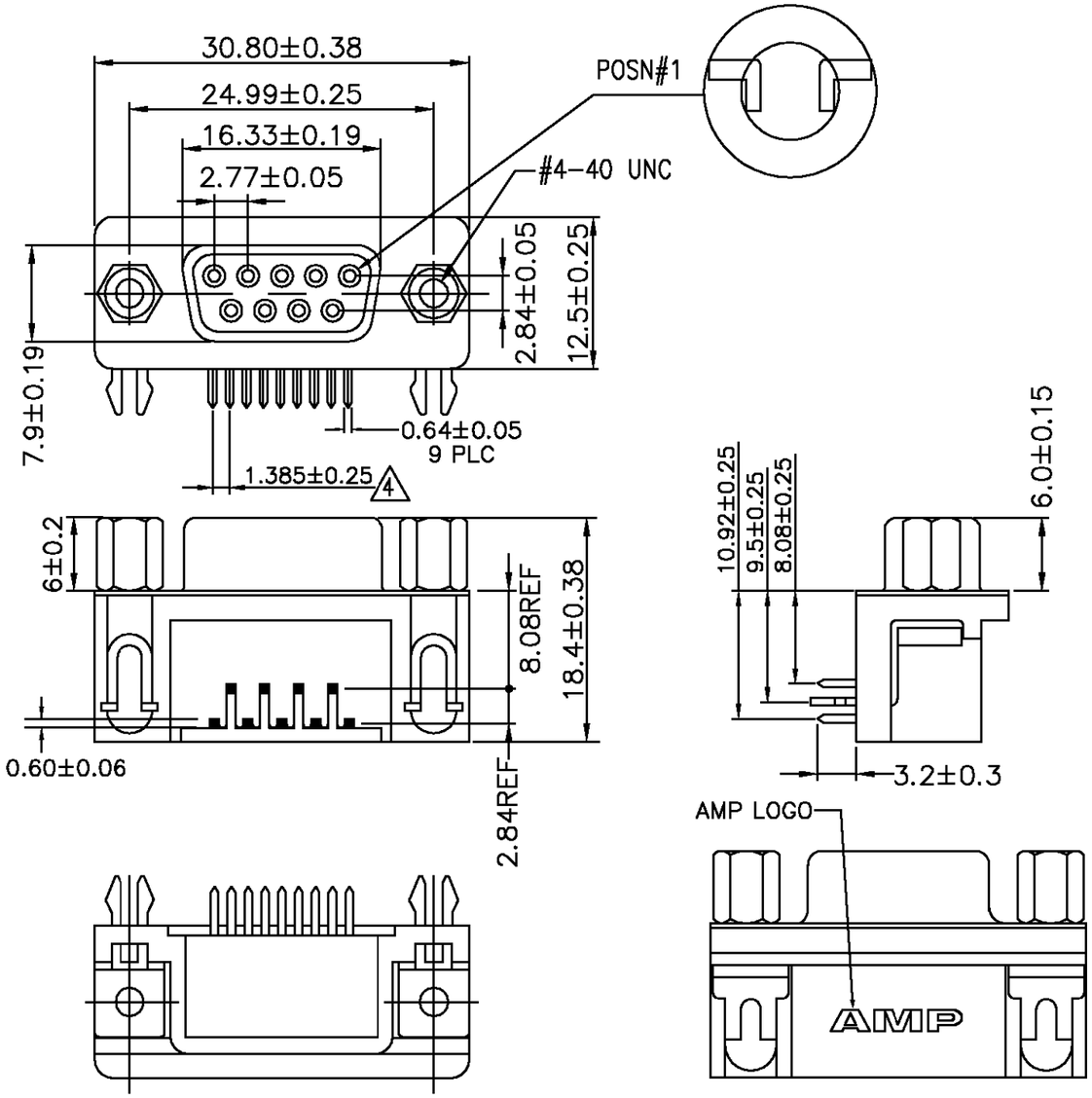


1. HOUSING: PBT, UL 94V-0 RATED, COLOR (SEE TABLE)
   CONTACTS: PHOSPHOR BRONZE.
   SHELL: STEEL.
   BOARDLOCKS: BRASS.
   THREADED INSERTS: BRASS.
   SCREWLOCK: BRASS.
2. CONTACTS: GOLD PLATED (SEE TABLE) ON MATING END, 2.54µm[.000100in] MIN TIN-LEAD ON SOLDER TAILS ALL OVER 1.27µm[.000050in] MIN NICKEL ON ENTIRE CONTACT.
   SHELL: NICKEL PLATED.
   BOARDLOCK: TIN OR TIN-LEAD PLATED 2.54µm[.000100in]
   THREADED INSERT: NICKEL PLATED 0.76µm[.000030in].
   SCREWLOCK: NICKEL PLATED 0.76µm[.000030in].
3. SPECIFICATIONS:
   CURRENT RATING: 2 AMPS. (SIGNAL APPLICATION ONLY)
   VOLTAGE RATING: 250 VAC.
   DIELECTRIC WITHSTANDING VOLTAGE: 500 VAC(RMS).
   INSULATION RESISTANCE: 1000 MEGOHMS MIN.
   CONTACT RESISTANCE: 20 MILLIOHMS MAX.
   OPERATING TEMPERATURE: -55° TO 105°C.
   SCREWLOCK TORQUE:[1.0in-lb]MIN. UNLOCKING TORQUE.
4. DIMENSION IS NON-CUMULATIVE.
5. SPECIFICATIONS SUBJECT TO CHANGES WITHOUT NOTICE.
   CONTACT AMP FOR THE LATEST SPECIFICATIONS.

| Packaging | Color | Contact Finish | AMP Part NO. |
|---|---|---|---|
| Tray | Black | 0.38µm[.000015in] | 788756-2 |
| Tray | Black | Gold-Flash | 788756-1 |

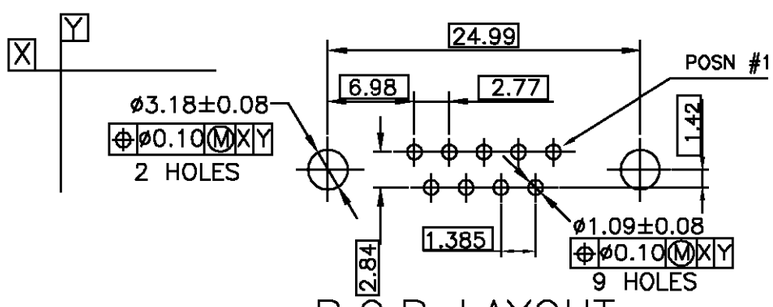


P.C.B LAYOUT

THIS DRAWING IS A CONTROLLED DOCUMENT.

DIMENSIONS: MM

TOLERANCES UNLESS OTHERWISE SPECIFIED:

| | |
|---|---|
| 0 PLC | ± - |
| 1 PLC | ± 0.3 |
| 2 PLC | ± 0.2 |
| 3 PLC | ± 0.1 |
| 4 PLC | ± - |
| ANGLES | ± - |

MATERIAL SEE NOTES 1

FINISH SEE NOTES 2

| | | |
|---|---|---|
| DWN | M.MORRIS | 01SEPT99 |
| CHK | S.GOOD | 01SEPT99 |
| APVD | S.GOOD | 01SEPT99 |
| PRODUCT SPEC | SEE NOTES 3 | |
| APPLICATION SPEC | - | |
| WEIGHT | - | |

AMP Incorporated
Harrisburg, PA 17105-3608

NAME: RECEPTACLE ASSEMBLY, 9 POSN, RIGHT ANGLE, 8.08mm[0.318in] SERIES, AMPLIMITE, WITH SCREWLOCKS

| SIZE | CAGE CODE | DRAWING NO | RESTRICTED TO |
|---|---|---|---|
| A3 | 00779 | C-788756 | - |

CUSTOMER DRAWING | SCALE 1:1 | SHEET 1 OF 1 | REV O

SUPERSEDED
NOT the LATEST REVISION