| PART NUMBER | REV | FIRST USED | TERMINATOR | FEED TYPE | DESCRIPTION |
|---|---|---|---|---|---|
| 1528268 – 1 | N | – | LEADMAKER | MECH POST FEED | CUTS CARRIER |
| 1528268 – 2 | N | – | BENCH | MECH PRE FEED | CUTS CARRIER |
| 1528268 – 6 | N | – | LEADMAKER | MECH POST FEED | CONTINUOUS CARRIER |
| 7 – 1528268 – 1 | N | – | LEADMAKER | MECH POST FEED | – 1 AND SPARE PARTS |
| 7 – 1528268 – 2 | N | – | BENCH | MECH PRE FEED | – 2 AND SPARE PARTS |
| 7 – 1528268 – 6 | N | – | LEADMAKER | MECH POST FEED | – 6 AND SPARE PARTS |
| 7 – 1528268 – 7 | J | – | – | – | SPARE PARTS KIT |

## CRIMP DATA SIEMENS TERMINAL SIEMENS CRIMP SPECS 4 5

TERMINAL NAME: FEMALE TERMINAL 0.50/0.75MM²

| CRIMP | SIZE | TYPE | RANGE |
|---|---|---|---|
| WIRE | 1.78 [.070 IN] | F | 0.50–0.75mm² |
| INSUL | 1.73 [.068 IN] | S | 1.60–1.90 [.063–.075 IN] |

WIRE STRIP LENGTH 4.40 [.173 IN]

APPL INSTRUCTION 408–8322 & 408–8490

TERMINAL APPL SPEC – 114–13060

FEED 8.00 [.315 IN]

### TERMINALS APPLIED

| AMP PN | MFR PN | – | – |
|---|---|---|---|
| 1393365–1 | V23540–X7000–Y20 | – | – |
| 1393366–1 | V23540–X7000–Y21 | – | – |
| 1438299–3 | V23540–X7000–Y40 | – | – |
| 1438299–4 | V23540–X7000–Y41 | – | – |
| – | – | – | – |
| – | – | – | – |
| – | – | – | – |

| WIRE SIZE mm² AWG | CRIMP HEIGHT * | REF SETTING |
|---|---|---|
| 0.75mm² | 1.10 ±0.04 [.0433 ±.0015 IN] | B 1 |
| 0.50mm² | 1.02 ±0.04 [.040 ±.0015 IN] | B 8 |
| – | – | – |
| – | – | – |
| – | – | – |
| – | – | – |
| – | – | – |
| – | – | – |
| – | – | – |
| – | – | – |
| – | – | – |
| – | – | – |
| – | – | – |
| – | – | – |
| – | – | – |

| SET UP GAGE | LAYOUT |
|---|---|
| 458637–3 | L1528073 |

1. RECOMMENDED SPARE PARTS.
2. GREASE RAM, CAM, CAM FOLLOWER AND FEED ROD LIGHTLY.
3. LUBRICATE DAILY PER THE APPLICATOR INSTRUCTION SHEET SUPPLIED WITH THE APPLICATOR.
4. INSULATION CRIMP HEIGHT NOT TO EXCEED 2.10mm FOR ALL WIRE SIZES.
5. WIDTH OF TERMINAL, ALONG ITS ENTIRE LENGTH, MUST NOT EXCEED 2.05mm.

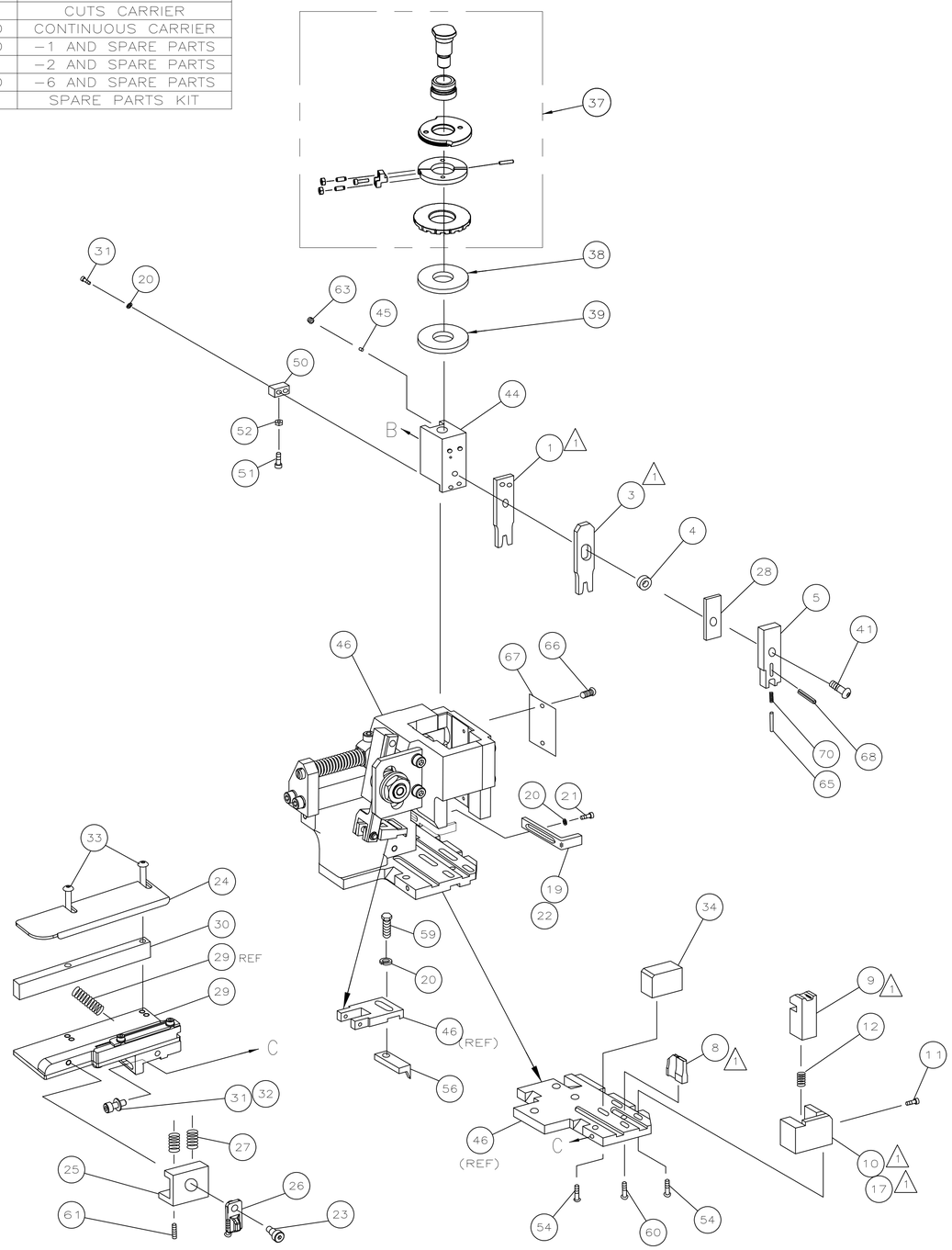


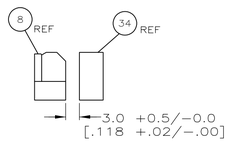


ITEM 34 LOCATION

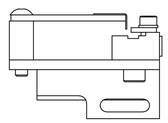

GUIDE OFF INSULATION BARREL

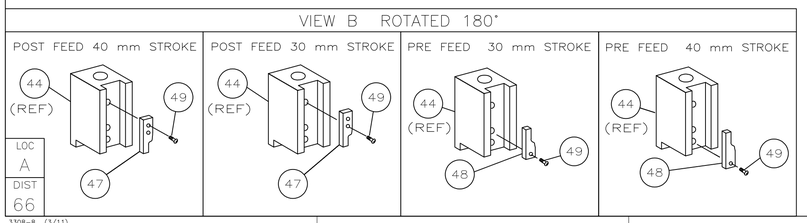


* WARNING:
ON INSTALLATION, SET WIRE DISC TO LARGEST WIRE SIZE SETTING. USE OF SETTINGS BELOW MIN REQ'D CRIMP HEIGHT SETTING WILL CAUSE DAMAGE TO CRIMP TOOLING.

USED ON –

| QTY REQD PER ASSY | | | | | | | PARTS LIST | | |
|---|---|---|---|---|---|---|---|---|---|
| | | | | | | | | | 73 |
| – | 1 | 1 | 1 | 1 | 1 | 1 | 1528268 | PRINT, APPLICATOR LOG SHEET | 72 |
| – | 1 | 1 | 1 | 1 | 1 | 1 | 1338705–3 | DOCUMENTATION PACKAGE | 71 |
| – | 1 | 1 | 1 | 1 | 1 | 1 | 5–547505–2 | SPRING, COMPRESSION | 70 |
| | | | | | | | | | 69 |
| – | 1 | 1 | 1 | 1 | 1 | 1 | 21028–2 | PIN, SLOTTED,SPRING | 68 |
| – | 1 | 1 | 1 | 1 | 1 | 1 | 461264–5 | PLATE, IDENTIFICATION | 67 |
| – | 2 | 2 | 2 | 2 | 2 | 2 | 21017–2 | SCR,DRIVE(#2x.19)ID PLATE | 66 |
| – | 1 | 1 | 1 | 1 | 1 | 1 | 854769–4 | HOLDER, INSULATION | 65 |
| | | | | | | | | | 64 |
| – | 1 | 1 | 1 | 1 | 1 | 1 | 3–18031–0 | SCR,SKT SET(M6X6)RAM | 63 |
| | | | | | | | | | 62 |
| – | 2 | 2 | 2 | 2 | 2 | 2 | 2–18032–5 | SCR,SOC SET(M5X20)DRAG | 61 |
| – | 1 | 1 | 1 | 1 | 1 | 1 | 18024–7 | SCR,BHC(M4X10)ANVIL | 60 |
| – | 1 | 1 | 1 | 1 | 1 | 1 | 5–18022–2 | SCR,HEX(M4X8)FEED FINGER | 59 |
| | | | | | | | | | 58 |
| | | | | | | | | | 57 |
| – | 1 | 1 | 1 | 1 | 1 | 1 | 1338685–1 | PAWL, FEED | 56 |
| | | | | | | | | | 55 |
| – | 4 | 4 | 4 | 4 | 4 | 4 | 18024–8 | SCR,BHC(M4x12)SHEAR HOLDER | 54 |
| | | | | | | | | | 53 |
| – | 1 | 1 | 1 | 1 | 1 | 1 | 18030–1 | NUT,HEX(M3)HOLD DOWN | 52 |
| – | 1 | 1 | 1 | 1 | 1 | 1 | 811242–5 | BUMPER, HOLDDOWN | 51 |
| – | 1 | 1 | 1 | 1 | 1 | 1 | 690753–2 | SPACER, TONKER | 50 |
| – | 1 | 1 | 1 | 1 | 1 | 1 | 18024–3 | SCR,BHC(M3X10)CAM | 49 |
| – | – | 1 | – | – | 1 | – | 1338675–1 | CAM, PRE FEED 30 & 40 mm ST | 48 |
| – | 1 | – | 1 | 1 | – | 1 | 1338676–1 | CAM, POST FEED 30 & 40 mm ST | 47 |
| – | 1 | 1 | 1 | 1 | 1 | 1 | 1320999–3 | APPLICATOR BASIC SUBASSY | 46 |
| – | 1 | 1 | 1 | 1 | 1 | 1 | 690191–1 | PLUG, NYLON | 45 |
| – | 1 | 1 | 1 | 1 | 1 | 1 | 1338660–1 | RAM | 44 |
| | | | | | | | | | 43 |
| | | | | | | | | | 42 |
| – | 1 | 1 | 1 | 1 | 1 | 1 | 2–18024–6 | SCR,BHC(M8X25)RAM | 41 |
| | | | | | | | | | 40 |
| – | 1 | 1 | 1 | 1 | 1 | 1 | 690125–1 | SHIM, SUB ASSY | 39 |
| – | 1 | 1 | 1 | 1 | 1 | 1 | 469367–8 | SPACER, FINE ADJUST | 38 |
| – | 1 | 1 | 1 | 1 | 1 | 1 | 879103–3 | FINE ADJUST HEAD SUBASSY | 37 |
| | | | | | | | | | 36 |
| | | | | | | | | | 35 |
| – | 1 | 1 | 1 | 1 | 1 | 1 | 1333246–2 | SUPPORT, TERMINAL | 34 |
| – | 2 | 2 | 2 | 2 | 2 | 2 | 1–18024–0 | SCR,BHC(M4X20)STRIP GUIDE | 33 |
| – | 1 | 1 | 1 | 1 | 1 | 1 | 18027–2 | WASHER, FLAT(M4) | 32 |
| – | 3 | 3 | 3 | 3 | 3 | 3 | 1–18023–2 | SCR,SKT CAP(M4X12)MOUNT BLOCK | 31 |
| – | 1 | 1 | 1 | 1 | 1 | 1 | 1320908–4 | SPACER, STRIP GUIDE | 30 |
| – | 1 | 1 | 1 | 1 | 1 | 1 | 1–1633073–7 | STRIP GUIDE PLATE ASSY | 29 |
| – | 1 | 1 | 1 | 1 | 1 | 1 | 455888–8 | SPACER, FRONT SHEAR DEP | 28 |
| – | 2 | 2 | 2 | 2 | 2 | 2 | 1–22284–0 | SPRING, DRAG | 27 |
| – | 1 | 1 | 1 | 1 | 1 | 1 | 356835–1 | LEVER, DRAG RELEASE | 26 |
| – | 1 | 1 | 1 | 1 | 1 | 1 | 217233–1 | DRAG, TERMINAL | 25 |
| – | 1 | 1 | 1 | 1 | 1 | 1 | 1320928–3 | PLATE, STRIP GUIDE | 24 |
| – | 1 | 1 | 1 | 1 | 1 | 1 | 980371–4 | SCR,SHC SHLD | 23 |
| – | 1 | – | 1 | 1 | – | 1 | 690472–2 | STRIPPER | 22 |
| – | 1 | 1 | 1 | 1 | 1 | 1 | 1–18023–1 | SCR,SHC(M4X10)STRIPPER | 21 |
| – | 4 | 4 | 4 | 4 | 4 | 4 | 18025–2 | WASHER,LOCK(M4)STRIPPER | 20 |
| – | – | 1 | – | – | 1 | – | 690472–1 | STRIPPER | 19 |
| | | | | | | | | | 18 |
| 1 – | 1 | – | – | 1 | – | – | 1338684–1 | HOLDER, SHEAR, FRONT (NO–CUT) | 17 |
| | | | | | | | | | 16 |
| | | | | | | | | | 15 |
| | | | | | | | | | 14 |
| | | | | | | | | | 13 |
| – | 1 | 1 | 1 | 1 | 1 | 1 | 3–22280–3 | SPRING, SHEAR | 12 |
| – | 1 | 1 | 1 | 1 | 1 | 1 | 356885–4 | STOP, SHEAR | 11 |
| – | – | 1 | 1 | – | 1 | 1 | 1320921–1 | HOLDER, SHEAR, FRONT (CUT) | 10 |
| 1 – | 1 | 1 | 1 | 1 | 1 | 1 | 454276–1 | SHEAR, FLOAT (FRONT) | 9 |
| 1 | 2 | 2 | 2 | 1 | 1 | 1 | 1333231–1 | ANVIL | 8 |
| | | | | | | | | | 7 |
| | | | | | | | | | 6 |
| – | 1 | 1 | 1 | 1 | 1 | 1 | 854772–1 | DEPRESSOR, SHEAR (FRONT) | 5 |
| – | 1 | 1 | 1 | 1 | 1 | 1 | 4–238011–0 | SPACER, BLOCK CRIMPER | 4 |
| 1 | 2 | 2 | 2 | 1 | 1 | 1 | 562308–5 | CRIMPER, INSULATION | 3 |
| | | | | | | | | | 2 |
| 1 | 2 | 2 | 2 | 1 | 1 | 1 | 5–562108–2 | CRIMPER, WIRE | 1 |
| –77 | –76 | –72 | –71 | –6 | –2 | –1 | PART NO | DESCRIPTION | ITEM NO |

| P | LTR | REVISION RECORD | DATE | DWN | APVD |
|---|---|---|---|---|---|
| | N | ECR–12–008682 | 10MAY2012 | MY | GB |

DIMENSIONS: INCHES

TOLERANCES UNLESS OTHERWISE SPECIFIED:
0 PLC ± –
1 PLC ± –
2 PLC ± 0.5 [.02 IN]
3 PLC ± –
4 PLC ± –
ANGLES ± –
SURFACE TEXTURE √

| | | | |
|---|---|---|---|
| DWN L.LOFTHOUSE | 02OCT03 | MATERIAL – – | HEAT TREAT – – |
| CHK – | | | |
| APVD F.BACKHURST | 02OCT03 | TE Connectivity | |
| NAME FINE ADJ SIDE FD HD–I APPL | | | |
| SCALE – | SIZE A1 | DRAWING NO 1528268 | SHEET 1 OF 1 REV N |


DIMENSIONING AND TOLERANCING PER ASME Y14.5M (ISO STANDARDS) THIS DRAWING IS A CONTROLLED DOCUMENT.

THIS INFORMATION IS CONFIDENTIAL AND PROPRIETARY TO TYCO ELECTRONICS CORPORATION AND ITS WORLDWIDE SUBSIDIARIES AND MAY NOT BE REPRODUCED OR DISCLOSED TO ANY PERSONS OTHER THAN TE PERSONNEL, WITHOUT AUTHORIZATION FROM TE (www.te.com).


3308–8 (3/11)