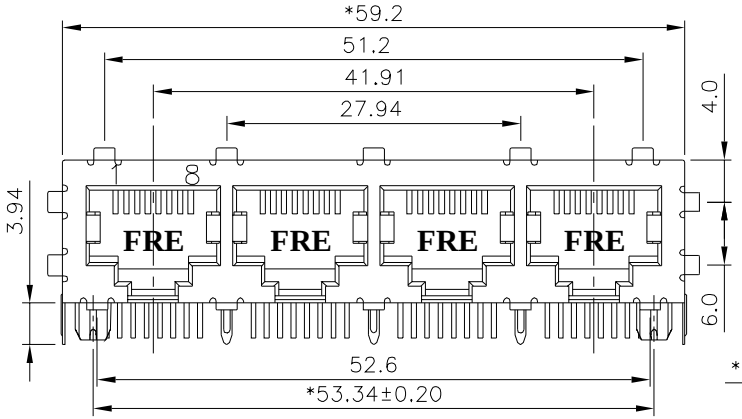

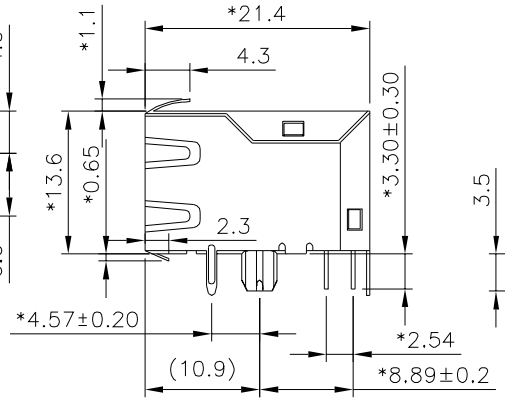

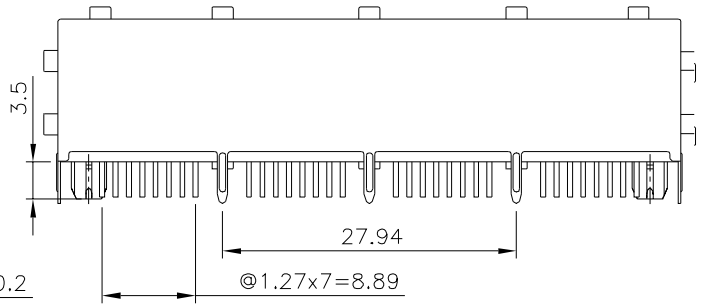

NOTES:

ELECTRICAL:

1. VOLTAGE RATING : 125VAC RMS.
2. CURRENT RATING : 1.5AMP.
3. CONTACT RESISTANCE : 40 MILLIOHMS MAX.
4. INSULATION RESISTANCE: 1000 MEGOHMS MIN @ 500 VDC.
5. DIELECTRIC STRENGTH : 750 VAC RMS 60Hz, 1MIN.
6. CATEGORY 5 CHARACTERISTIC:

Frequence	Near-End Cross Talk dB, MIN.	Return Loss dB, MIN.	Attenuation dB, MAX.
1.0 MHZ	65	23	0.1
4.0 MHZ	65	23	0.1
8.0 MHZ	62	23	0.1
10.0 MHZ	60	23	0.1
16.0 MHZ	56	23	0.2
20.0 MHZ	54	23	0.2
25.0 MHZ	52	14	0.2
31.25 MHZ	50	14	0.2
62.5 MHZ	44	14	0.3
100.0 MHZ	40	14	0.4

MECHANICAL:

1. HOUSING MATERIAL : GLASS FILLED NYLON UL94V-0.
2. INSERT& PLATE MATERIAL : NYLON UL94V-0.
3. CONTACT MATERIAL : PHOSPHOR BRONZE t=0.35mm.
4. PLATING : CONTACT AREA -SELECTIVE GOLD.
   : TAILS-150u'' TIN MIN OVER NICKEL.
5. OPERATING LIFE : 750 CYCLES MIN.
6. PCB RETENTION PRE-SOLDER : 1 LB MIN.
7. PCB RETENTION POST-SOLDER: 10 LBS MIN.

ENVIRONMENTAL:

1. STORAGE TEMPERATURE : -40°C TO +85°C.
2. OPERATION TEMPERATURE: -40°C TO +85°C.
3. WAVE SOLDER TEMPERATURE: 255~265°C (5~10 SECONDS).
4. RoHS COMPLIANT.

MATES WITH MODULAR PLUG CONFORMING TO FCC PART 68, SUBPART F.

PART NUMBER	GOLD PLATING
E6588-UEC3A2-L	6u"
E6588-UEC3A4-L	30u"

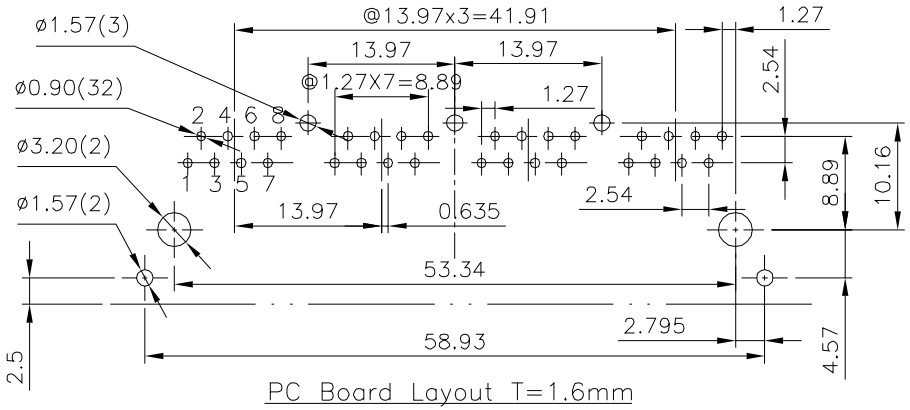

PC Board Layout T=1.6mm

Component Side Shown Tolerance±0.05mm

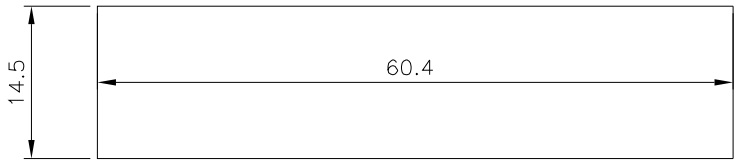

SUGGESTED PANEL CUTOUT DIMENSIONS

MM (INCH) TOLERANCES EXCEPT AS NOTED; MM .0 ± 0.2 ±; .00 ± 0.15 ±; .000 ± 0.075 ±; ANGLES ± 0.5; THIRD ANGLE PROJECTION	RoHS Compliant	Pulse A TECHNITROL COMPANY	
DETACHED LISTS	TITLE CAT.5 PCB JACK (4PORTS)		
	DFTO Cathy	DRAWING NO. CE653007-LB	SIZE A3 / REV 0
	DATE 2006/09/07	/PART NO. SEE TABLE	
	SCALE : 2:1	DO NOT SCALE DRAWING	SHEET 1 OF 1