THIS DRAWING IS UNPUBLISHED. RELEASED FOR PUBLICATION -,- .
© COPYRIGHT - BY TYCO ELECTRONICS CORPORATION. ALL INTERNATIONAL RIGHTS RESERVED.

LOC	DIST
A	66

REVISIONS

P	LTR	DESCRIPTION	DATE	DWN	APVD
	B	ECR-09-012592	6-2009	MY	GB

PART NUMBER	REV	FIRST USED	TERMINATOR	FEED TYPE	DESCRIPTION
1426367-1	B	-	LEADMAKER	MECH POST FEED	CUTS CARRIER
1426367-2	B	-	BENCH	MECH PRE FEED	CUTS CARRIER
1426367-6	B	-	LEADMAKER	MECH POST FEED	CONTINUOUS CARRIER
7-1426367-1	B	-	LEADMAKER	MECH POST FEED	-1 AND SPARE PARTS
7-1426367-2	B	-	BENCH	MECH PRE FEED	-2 AND SPARE PARTS
7-1426367-6	B	-	LEADMAKER	MECH POST FEED	-6 AND SPARE PARTS
7-1426367-7	A	-	-	-	SPARE PARTS KIT

CRIMP DATA DELPHI TERMINAL AMP CRIMP SPECS

TERMINAL NAME: TERM F M/P 150.1 P2S

CRIMP	SIZE	TYPE	RANGE
WIRE	1.57 [.062 IN] △4	F	0.50mm² △5
INSUL	2.29 [.090 IN] △4	F	1.78 MAX [.070 IN MAX]

WIRE STRIP LENGTH 3.80-4.60 [.150-.181 IN]

APPL INSTRUCTION 408-8322

TERMINAL	-	-	FEED
APPL SPEC	-	-	9.90 [.390 IN]

TERMINALS APPLIED

AMP TERM PN	MFR TERM PN	-	-	-
1572131-1	12089340	-	-	-
-	-	-	-	-
-	-	-	-	-
-	-	-	-	-
-	-	-	-	-
-	-	-	-	-
-	-	-	-	-

WIRE SIZE mm² AWG	CRIMP HEIGHT △4	PIN PN AND LENGTH [IN]
0.50mm²	1.22 ±0.05 [.048 ±.002 IN]	2-354779-2 [.3100]
-	-	-
-	-	-
-	-	-
-	-	-
-	-	-
-	-	-
-	-	-
-	-	-
-	-	-
-	-	-
-	-	-
-	-	-
-	-	-
-	-	-
-	-	-

SET UP GAGE	LAYOUT
458637-3	L1426367

1. △1 RECOMMENDED SPARE PARTS.
2. GREASE RAM, CAM, CAM FOLLOWER AND FEED ROD LIGHTLY.
3. LUBRICATE DAILY PER THE APPLICATOR INSTRUCTION SHEET SUPPLIED WITH THE APPLICATOR.
4. △4 ALL CRIMP DATA CALCULATED BY TYCO ELECTRONICS UK LTD.
5. △5 DELPHI RECOMMENDED TERMINAL WIRE RANGE IS 0.80-1.00mm². ORIGINAL CUSTOMER REQUIRES APPLICATION OF 0.50mm². TYCO ELECTRONICS TAKES NO RESPONSIBILITY FOR PRODUCT ISSUES USING THE 0.50mm² WIRE TO TERMINAL COMBINATION.

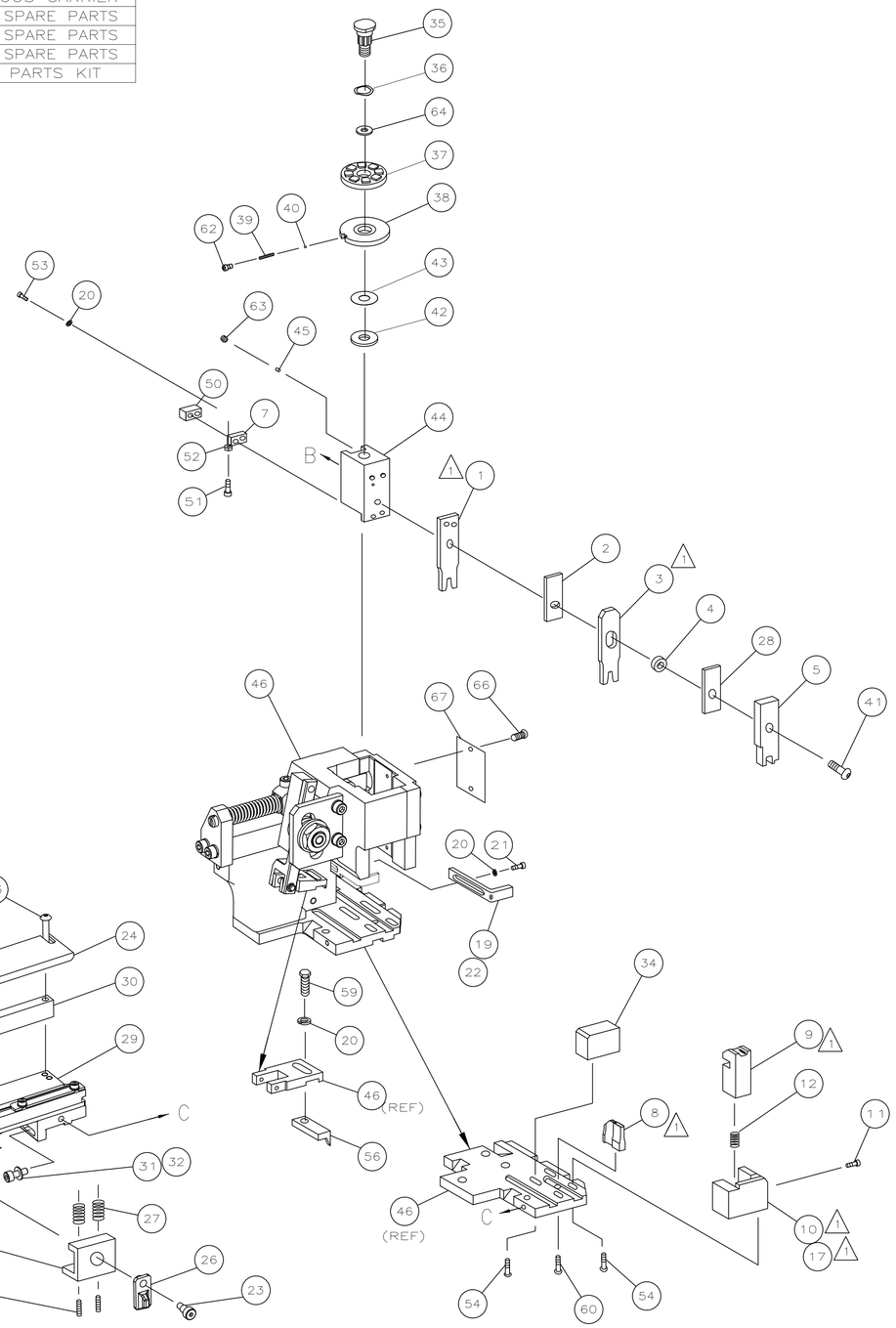

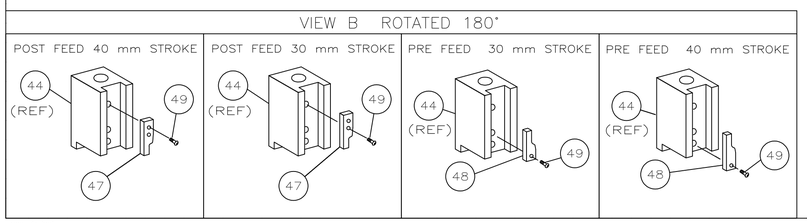

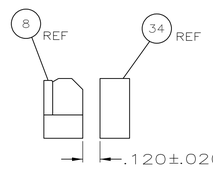

ITEM 34 LOCATION

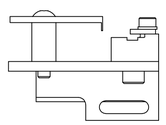

									73
-	1	1	1	1	1	1	1426367	PRINT, APPLICATOR LOG SHEET	72
-	1	1	1	1	1	1	1338705-1	DOCUMENTATION PACKAGE	71
									70
									69
									68
-	1	1	1	1	1	1	461264-1	PLATE, IDENTIFICATION	67
-	2	2	2	2	2	2	21017-2	SCR,DRIVE(#2x.19)ID PLATE	66
									65
-	1	1	1	1	1	1	986950-1	WASHER, FLAT PRECISION	64
-	1	1	1	1	1	1	3-18031-0	SCR,SKT SET(M6X6)RAM	63
-	1	1	1	1	1	1	18023-9	SCR,SHC(M4X6)INS DISC	62
-	2	2	2	2	2	2	2-18032-5	SCR,SET(M5X20)DRAG	61
-	1	1	1	1	1	1	18024-7	SCR,BHC(M4X10)ANVIL	60
-	1	1	1	1	1	1	5-18022-2	SCR,HEX(M4X8)FEED FINGER	59
									58
									57
-	1	1	1	1	1	1	1338685-1	PAWL, FEED	56
									55
-	4	4	4	4	4	4	18024-8	SCR,BHC(M4x12)SHEAR HOLDER	54
-	2	2	2	2	2	2	9-18023-6	SCR,SHC(M4x14)TERM HLD DWN	53
-	1	1	1	1	1	1	18030-1	NUT,HEX(M3)HOLD DOWN	52
-	1	1	1	1	1	1	811242-5	BUMPER, HOLDDOWN	51
-	1	1	1	1	1	1	690753-2	SPACER, TONKER	50
-	1	1	1	1	1	1	18024-3	SCR,BHC(M3X10)CAM	49
-	-	1	-	-	1	-	1338675-1	CAM, PRE FEED 30 & 40 mm ST	48
-	1	-	1	1	-	1	1338676-1	CAM, POST FEED 30 & 40 mm ST	47
-	1	1	1	1	1	1	1320999-3	APPLICATOR BASIC SUBASSY	46
-	1	1	1	1	1	1	690191-1	PLUG, NYLON	45
-	1	1	1	1	1	1	1338660-1	RAM	44
-	1	1	1	1	1	1	690125-1	WASHER, LAMINATED	43
-	1	1	1	1	1	1	690124-1	WASHER, RAM	42
-	1	1	1	1	1	1	2-18024-6	SCR,BHC(M8X25)RAM	41
-	1	1	1	1	1	1	23241-1	BALL, STEEL	40
-	1	1	1	1	1	1	2-22278-7	SPRING, COMPRESSION	39
-	1	1	1	1	1	1	1320922-1	DISC, INSULATION	38
-	1	1	1	1	1	1	354777-1	WIRE DISC, PLASTIC	37
-	1	1	1	1	1	1	22480-5	WASHER, SPRING	36
-	1	1	1	1	1	1	690212-1	POST, RAM	35
-	1	1	1	1	1	1	1320934-1	SUPPORT, TERMINAL	34
-	2	2	2	2	2	2	1-18024-0	SCR,BHC(M4X20)STRIP GUIDE	33
-	1	1	1	1	1	1	18027-2	WASHER, FLAT(M4)	32
-	1	1	1	1	1	1	1-18023-2	SCR,SKT CAP(M4X12)MOUNT BLOCK	31
-	1	1	1	1	1	1	1320908-1	SPACER, STRIP GUIDE	30
-	1	1	1	1	1	1	1633073-1	STRIP GUIDE PLATE ASSY	29
-	1	1	1	1	1	1	455888-1	SPACER, FRONT SHEAR DEP	28
-	2	2	2	2	2	2	1-22284-0	SPRING, DRAG	27
-	1	1	1	1	1	1	356835-1	LEVER, DRAG RELEASE	26
-	1	1	1	1	1	1	240792-1	DRAG, TERMINAL	25
-	1	1	1	1	1	1	1320928-1	PLATE, STRIP GUIDE	24
-	1	1	1	1	1	1	980371-4	SCR,SHC SHLD	23
-	1	-	1	1	-	1	690472-2	STRIPPER	22
-	1	1	1	1	1	1	1-18023-1	SCR,SHC(M4X10)STRIPPER	21
-	4	4	4	4	4	4	18025-2	WASHER,LOCK(M4)STRIPPER	20
-	-	1	-	-	1	-	690472-1	STRIPPER	19
									18
△1 -	1	-	-	1	-	-	1338684-1	HOLDER, SHEAR, FRONT (NO-CUT)	17
									16
									15
									14
									13
-	1	1	1	1	1	1	3-22280-3	SPRING, SHEAR	12
-	1	1	1	1	1	1	356885-4	STOP, SHEAR	11
-	-	1	1	-	1	1	1320921-1	HOLDER, SHEAR, FRONT (CUT)	10
△1 -	1	1	1	1	1	1	462006-1	SHEAR, FLOAT (FRONT)	9
1	2	2	2	1	1	1	4-1333202-2	ANVIL	8
-	1	1	1	1	1	1	240641-9	SPACER, DEPRESSOR (REAR)	7
									6
-	1	1	1	1	1	1	2-455889-0	DEPRESSOR, SHEAR (FRONT)	5
-	1	1	1	1	1	1	2-238011-2	SPACER, BLOCK CRIMPER	4
△1 1	2	2	2	1	1	1	6-456134-3	CRIMPER, INSULATION	3
-	1	1	1	1	1	1	455888-5	SPACER, CRIMPER	2
△1 1	2	2	2	1	1	1	1-456403-5	CRIMPER, WIRE	1
-77	-76	-72	-71	-6	-2	-1	PART NO	DESCRIPTION	ITEM NO

QTY REQD PER ASSY

PARTS LIST

THIS DRAWING IS A CONTROLLED DOCUMENT.

DIMENSIONS: INCHES

TOLERANCES UNLESS OTHERWISE SPECIFIED:
0 PLC ± -
1 PLC ± -
2 PLC ± -
3 PLC ± -
4 PLC ± -
ANGLES ± -

MATERIAL -
FINISH -

DWN M.CLIFFORD 05SEP02
CHK -
APVD F.BACKHURST 05SEP02
PRODUCT SPEC -
APPLICATION SPEC -
WEIGHT -

Tyco Electronics
Tyco Electronics Corporation
Harrisburg, PA 17105-3608

NAME SIDE FEED HD-I APPLICATOR

SIZE	CAGE CODE	DRAWING NO	RESTRICTED TO
A1	00779	C-1426367	-

CUSTOMER DRAWING SCALE - SHEET 1 OF 1 REV B

4805 (1/08)

03JUN2009 8:20am