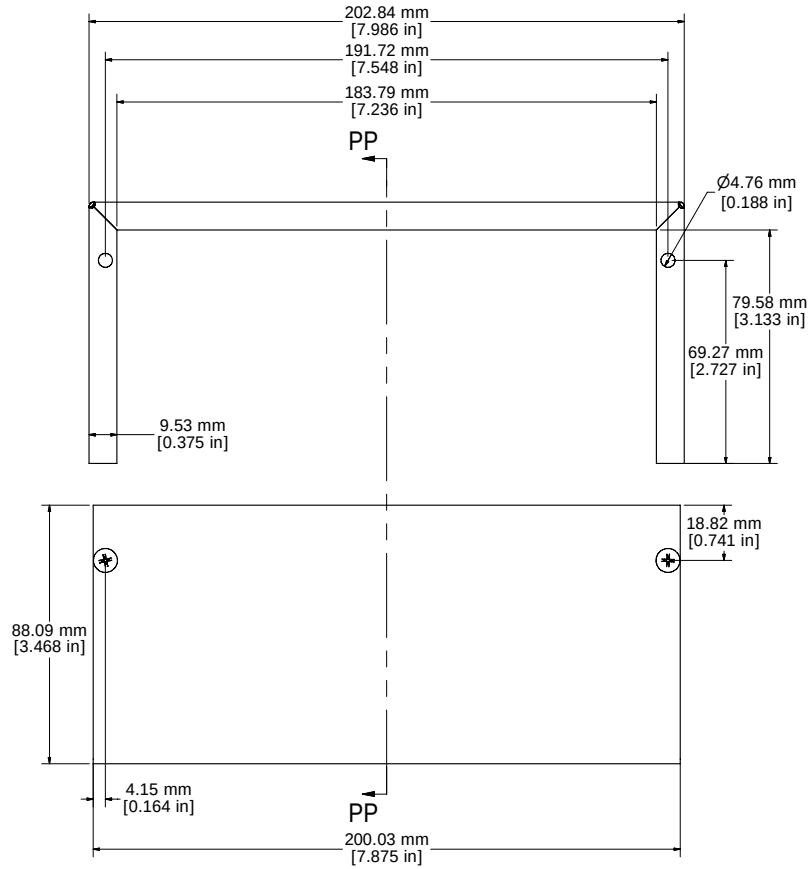

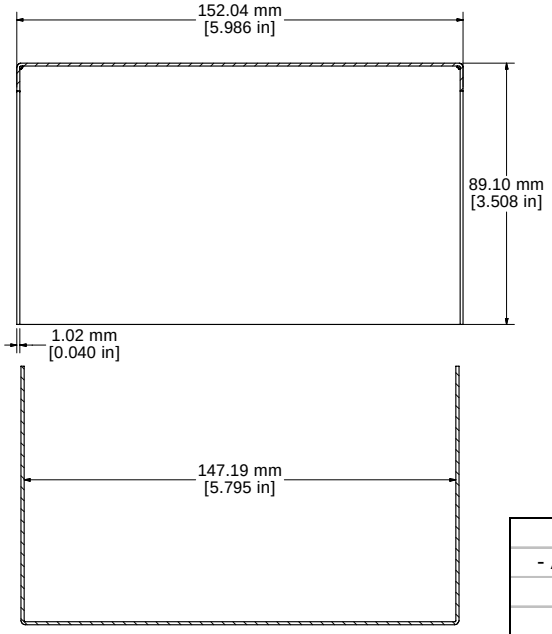

SECTION PP-PP

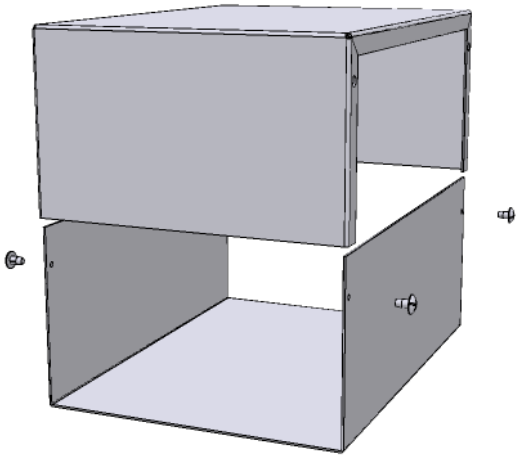

- 12 GAUGE NATURAL ALUMINUM BODY - 1411RU
- ASA 61 GREY POWDER PAINTED ALUMINUM BODY - 1411R
- 0.040" THICK ALUMINUM PANELS
- FOUR 6-32 NICKEL PLATED SCREWS
- FOUR SELF ADHESIVE RUBBER FEET

Contact Factory mjm@hammondmfg.com for quotes
Enclosures can be Factory Modified (Milling, Drilling, Printing etc.)
Solid models of this enclosure available in STEP or IGES.

HAMMOND MANUFACTURING™

1411R

www.hammondmfg.com