PACKAGE OUTLINE

BRIDGE

KBJ(4A)

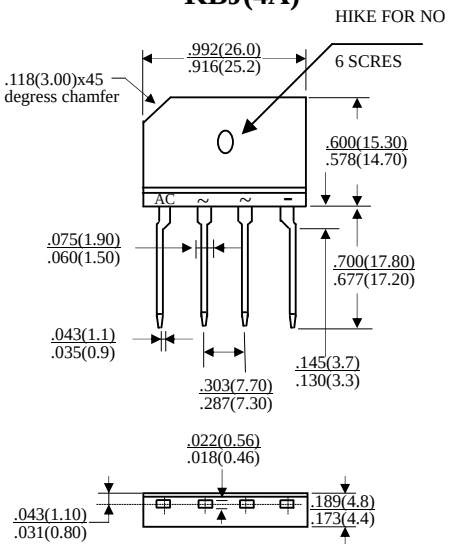

Dimensions in inches and (millimeters)

KBJ/GBJ(6A/8A/10A/15A/20A/25A)

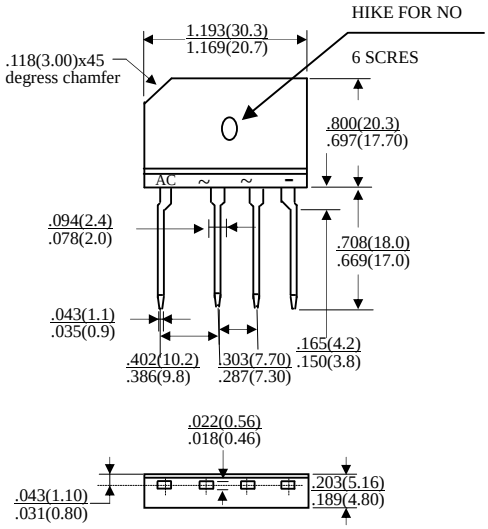

Dimensions in inches and (millimeters)

GBPC-W

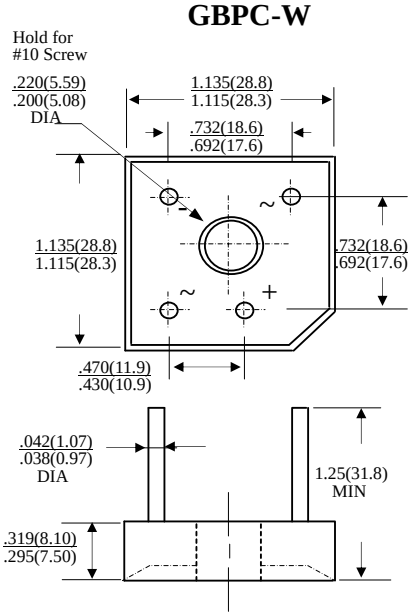

Dimensions in inches and (millimeters)

GBU

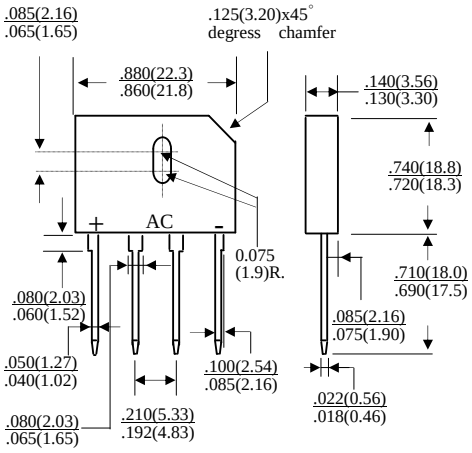

Dimensions in inches and (millimeters)