used for: D-SUB COMBINATION

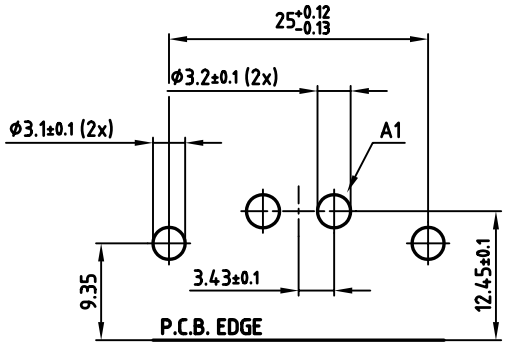

P.C.B.-HOLE DRILLINGS

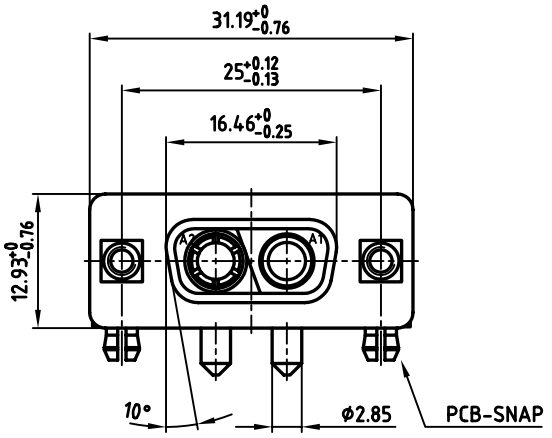

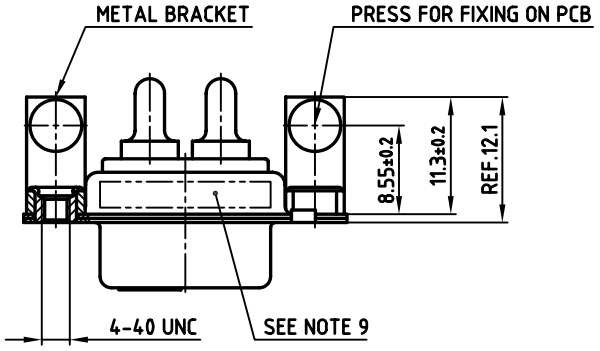

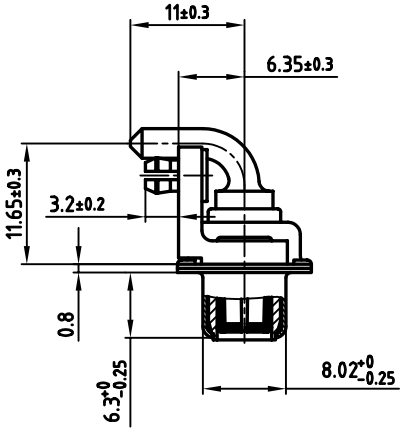

NOTES:

1. METALSHELLS: STEEL; min. 320µin TIN
2. INSULATORS: PBT GF UL 94 V-0, GREEN
3. HIGH POWER CONTACTS 20A: COPPER ALLOY
   PLATING: 30µin HARD GOLD OVER min. 50µin NICKEL
4. MALE CONTACT ON POS. A1, FEMALE CONTACT ON POS. A2
5. METAL BRACKET: DIE-CASTING; min. 320µin TIN over 80µin NICKEL
6. THREADED INSERT: COPPER ALLOY; min. 200µin TIN over 80µin NICKEL
7. PCB-SNAP: COPPER ALLOY; min. 200µin TIN over 80µin NICKEL
   PCB-HOLE: Ø3.1±0.1; PCB THICKNESS 1.6mm
8. MAXIMUM TORQUE VALUE FOR THREAD: 6 in.LB
9. CONNECTOR IS PART MARKED: 302W2CSXX56N40X CONEC ABC

Directive 2002/95/EC „RoHS" Compliant

APPROVAL # FREIGABE # DEBLOCAGE # AUTOR/ZACION # APPROVAL

CUSTOMER APPROVAL DATE:

NAME: TITLE:

COMPANY NAME:

THIS DRAWING MAY NOT BE COPIED OR REPRODUCED IN ANY WAY, AND MAY NOT BE PASSED ON TO A THIRD PARTY WITHOUT WRITTEN PERMISSION. OWNERSHIP AND COPYRIGHT OF CONEC GmbH

DO NOT ALTER CAD DRAWING BY HAND

rev.	description	date	name
a	Origin		

tolerance

	date	name
2006		
drawn	09.02.	Lehmenkühler
appd.	09.02.	Mickenbecker
norm		
d-old		

CONEC®

scale: 2:1
material: SEE NOTES

title:
D-SUB COMBINATION FEMALE 90°
2W2CS
with threaded insert, metal bracket and clip

dwg no: 13K1A1713
AutoCAD 2004 DIN-A 3 sh: 1/1

part no: 302W2CSXX56N40X