THIS DRAWING IS UNPUBLISHED. RELEASED FOR PUBLICATION 20
© COPYRIGHT 20 BY TYCO ELECTRONICS CORPORATION. ALL RIGHTS RESERVED.

LOC	DIST
FT	0

REVISIONS

P	LTR	DESCRIPTION	DATE	DWN	APVD
	D	REVISED PER 0G3B-0119-01	23OCT2001	EZ	DB

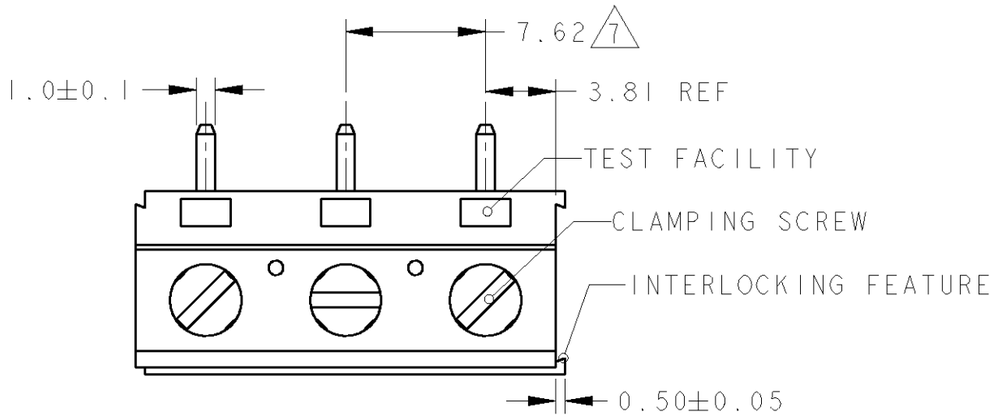

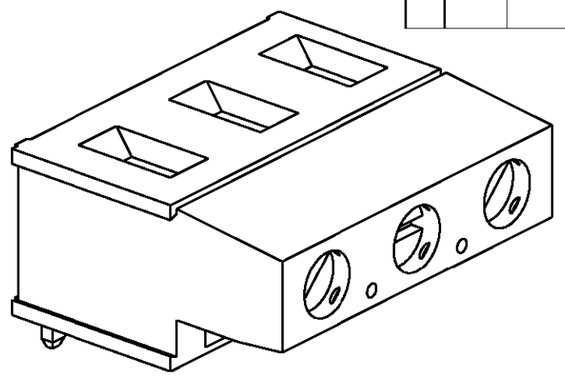

282867-3 AS SHOWN

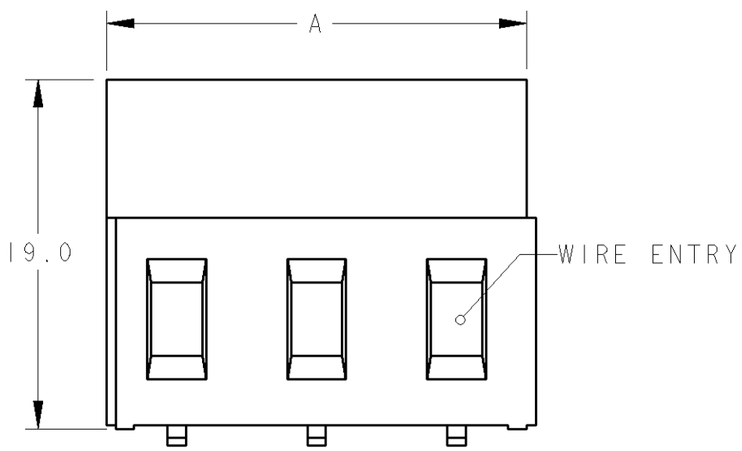

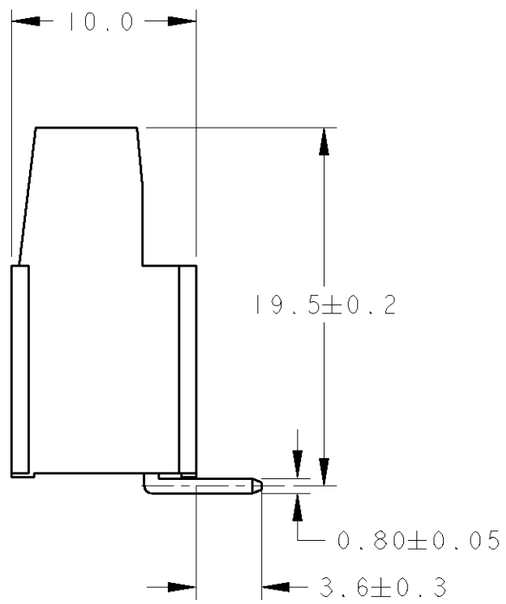

1 MATERIALS AND FINISH
HOUSING: PA 6-6, UL 94-V0, COLOR GREEN.
CLAMP: BRASS, NICKEL PLATED.
TERMINAL: BRASS, TIN PLATED.
CLAMPING SCREW: M3, BRASS, NICKEL PLATED.

2 SUITABLE FOR 1,6-2,4mm PC BOARD THICKNESS.

3 END-TO-END STACKABLE W/INTERLOCK WITHOUT LOSS OF CENTERLINE SPACING.

4 WIRE SIZE RANGE
12 - 30 AWG

5 RECOGNIZED UNDER THE COMPONENT PROGRAM OF UNDERWRITERS LABORATORIES INC., FILE N° E60677.

6 WITH IEC 998-1/998-2-1.

7 NOT CUMULATIVE TOLERANCE.

DIM. A	N° OF POS.	PART NUMBER
22.86	3	282867-3
15.24	2	282867-2

RECOMMENDED PC BOARD LAYOUT

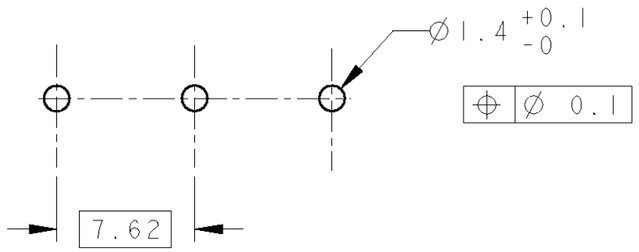

THIS DRAWING IS A CONTROLLED DOCUMENT FOR TYCO ELECTRONICS CORPORATION. IT IS SUBJECT TO CHANGE AND THE CONTROLLING ENGINEERING ORGANIZATION SHOULD BE CONTACTED FOR THE LATEST REVISION.

DIMENSIONS: mm

TOLERANCES UNLESS OTHERWISE SPECIFIED:
0 PLC ±-
1 PLC ±.3
2 PLC ±.25
3 PLC ±-
4 PLC ±-
ANGLES ±2

MATERIAL 1

FINISH 1

DWN 23OCT2001 E. ZANOLINI
CHK 23OCT2001 D. BIEVENOUR
APVD 23OCT2001 D.BIEVENOUR
PRODUCT SPEC 108-20166
APPLICATION SPEC 114-20079
WEIGHT -

CUSTOMER DRAWING

BUCHANAN
Tyco Electronics
Harrisburg, PA 17105-3608

NAME
TERMINAL BLOCK, PCB MOUNT
TOP ENTRY WIRE, STACKING
W / INTERLOCK, 7.62mm PITCH

SIZE	CAGE CODE	DRAWING NO	RESTRICTED TO
A3	00779	C-282867	-

SCALE 3:1 SHEET 1 OF 1 REV D

AMP 1470-19 REV 31MAR2000

Pro/ENGINEER DRAWING