1/4 ROUND SWAGE STANDOFFS

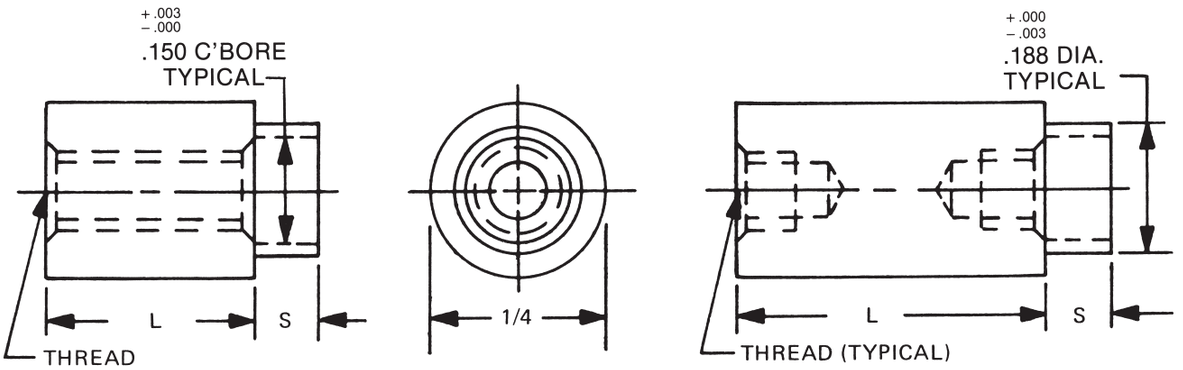

L = STANDOFF LENGTH
S = SHANK LENGTH
P = BOARD THICKNESS

See page iv for installation information

See page 10 for thread depth chart
See page 9 for finish codes
For non-standard parts contact Sales Office

ORDERING CODE

XXXX or XXXXX — LENGTH
X — SHANK
XXX — THREAD
X — MATERIAL
X — FINISH

SWAGE TOOLING		
PUNCH	ANVIL	LENGTH
P-4	AR-22	3/32-3/16
	AR-23	7/32-7/16
	AR-24	15/32-11/16
	AR-25	23/32-2"

SWAGE/PANEL CODE		
±.003	S	P
.075	A	1/32
.105	B	1/16
.135	C	3/32
.165	D	1/8
.230	E	3/16
.290	F	1/4

LENGTH	PART NO.
3/32	**3045A**
1/8	**3045**
5/32	**3045T**
3/16	**3046**
7/32	**3046T**
1/4	**3047**
9/32	**3047T**
5/16	**3048**
11/32	**3048T**
3/8	**3049**
13/32	**3049T**
7/16	**3050**
15/32	**3050T**
1/2	**3051**
17/32	**3051T**

LENGTH	PART NO.
9/16	**3052**
19/32	**3052T**
5/8	**3053**
21/32	**3053T**
11/16	**3054**
23/32	**3054T**
3/4	**3055**
25/32	**3055T**
13/16	**3056**
27/32	**3056T**
7/8	**3057**
29/32	**3057T**
15/16	**3058**
31/32	**3058T**
1"	**3059**

LENGTH	PART NO.
1-1/16	**3060**
1-1/8	**3061**
1-3/16	**3062**
1-1/4	**3063**
1-5/16	**3064**
1-3/8	**3065**
1-7/16	**3066**
1-1/2	**3067**
1-9/16	**3068**
1-5/8	**3069**
1-11/16	**3070**
1-3/4	**3071**
1-13/16	**3072**
1-7/8	**3073**
1-15/16	**3074**
2"	**3075**

THREAD	CODE
2-56	256
3-48	348
4-40	440
6-32	632

MATERIAL	CODE	RoHS
Aluminum	AL	YES
Brass	B	YES
Stainless Steel	SS	YES
Steel	S	YES

RAF ELECTRONIC HARDWARE
95 Silvermine Road, Seymour, Ct. 06483 Phone: 203-888-2133 Fax: 203-888-9860
e-mail : info@rafhdwe.com Web: www.rafhdwe.com