SHEET OF

NOTES:
1. ALL DIMENSION IN MM [INCH]
2. GENERAL TOLERANCE: X.X=±0.4
   X.XX=±0.25
▲ 3. CONTACT: GOLD FLASH over SILVER PLATE
4. CONTACT RATING SWITCHING: 150mA, 250V AC/DC
   350mA, 110V AC/DC
5. OPERATING FORCE: 425±100 CM/STANDARD
6. OPERATING TEMP: −30° to 85°C
▲ 7. CIRCUIT SP: 9 POSITIONS, 30° INDEX.
8. DIELECTRIC STRENGTH: 1000V RMS min.@Sea Level
9. ▲ DESIGNATE MAJOR DIMENSIONS
10. TIMING: BBM (Non-Shorting) Break Before Make.
▲ 11. HARDWARE SUPPLIED ON SWITCH- SEE BELOW
   STOPRING, LOCKWASHER, & HEXNUT

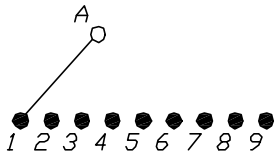

CONTACT CONFIGURATION
(SEE NOTE 10)

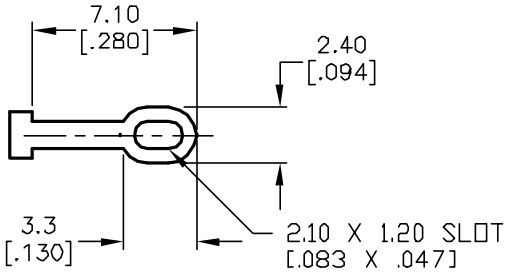

TERMINATION DETAIL
SCALE 2X

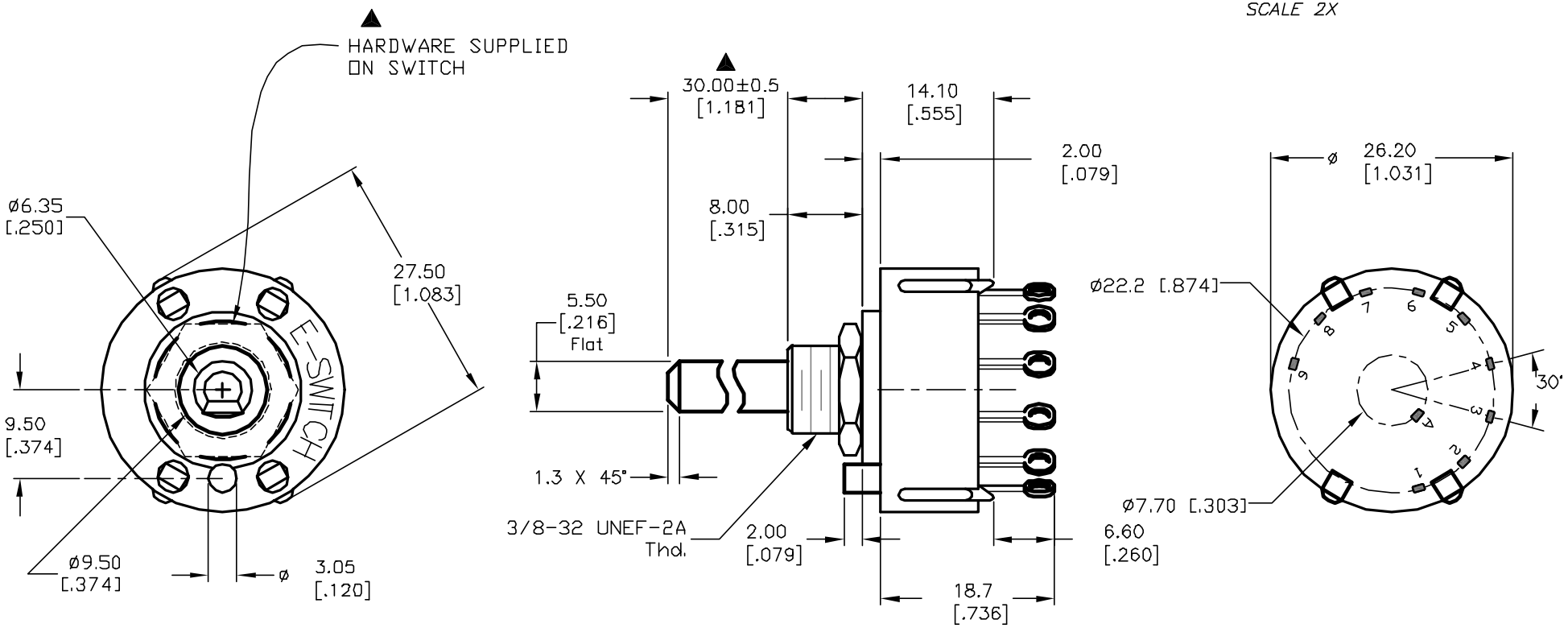

REV.	ECN No.	DESCRIPTION	DATE	CHKD
A	12821	RELEASED FOR PRODUCTION	2/25/03	CJB

THE INFORMATION CONTAINED IN THIS DOCUMENT IS PROPRIETARY TO E-SWITCH AND IS NOT TO BE COPIED OR TRANSFERRED

E-SWITCH®

TITLE: KC-19-A (30.0mm)-01-N-L-F

SCALE	DATE	DR	DWG	REV
1.5:1	2/25/03	CJB	G510102	A