Ver.1.01

Specification

SMD Inductors Large Current Shield Type

NS12555 Type

TAIYO YUDEN

1. Scope

This specification applies to wire wound inductors for NS12555 series.

2. Part number

For example:

NS	12555	T	100	M	N
(1)	(2)	(3)	(4)	(5)	(6)

(1) Type
(2) External dimensions
(3) Packaging (T: Tape and reel)
(4) Nominal inductance
(5) Inductance tolerance (M: ±20 %, N: ±30 %)
(6) Internal code (N: Marking, standard)

3. Standard method of measurement

Inductance: LCR meter (Agilent 4285A or equivalent, 100 KHz, 1 V r.m.s.)
DC resistance: DC resistance meter (HIOKI 3227 or equivalent)
Self resonance frequency: Impedance material analyzer (Agilent 4291A or equivalent)

Standard test conditions :

Unless specified, Ambient temperature is 20±15 ℃ and the Relative humidity is 65±20 %.
If there is any doubt about the test results, further measurement shall be had within the following limits:
Ambient Temperature: 20±2 ℃ Relative humidity: 65±5 %
Inductance value is based on our standard measurement systems.

4. Operating temperature range -40 ℃ to +125 ℃ (including self temperature rise)

5. Storage temperature range Component: -40 ℃ to +85 ℃, Packaging: -5 ℃ to +40 ℃

6. Electrical specification Table-1, Table-4

7. Dimensions and Shape Table-2

8. Top side marking formats Table-3

9. Physical characteristics tests Table-4

10. Environmental tests Table-4

11. Dimensions of tape and reel Table-5, Table-6

12. Packaging style Table-6

13. Reflow profile chart(ref.) Table-7

	Table-1	
	Electrical specification	(2 / 1 2)

Part number	Nominal inductance [μH]	Inductance tolerance [%]	DC resistance ±20 % [Ω]	Rated current [A]		SRF [MHz] Min.
				Saturation Current Idc1	Temperature Rise current Idc2	
NS12555T6R0NN	6.0	±30	0.0140	5.01	5.60	26.4
NS12555T100MN	10	±20	0.0175	4.73	5.04	21.8
NS12555T150MN	15	±20	0.0233	3.89	4.18	16.6
NS12555T220MN	22	±20	0.0297	3.20	3.81	13.2
NS12555T330MN	33	±20	0.0415	2.64	3.16	10.8
NS12555T470MN	47	±20	0.0551	2.23	2.70	9.3
NS12555T680MN	68	±20	0.0797	1.81	2.14	7.9
NS12555T101MN	100	±20	0.117	1.53	1.86	6.7
NS12555T151MN	150	±20	0.176	1.22	1.43	5.1
NS12555T221MN	220	±20	0.270	1.00	1.18	4.4
NS12555T331MN	330	±20	0.410	0.82	0.96	3.4
NS12555T471MN	470	±20	0.520	0.68	0.80	2.8
NS12555T681MN	680	±20	0.760	0.60	0.72	2.5
NS12555T102MN	1000	±20	1.12	0.47	0.59	2.0
NS12555T152MN	1500	±20	1.73	0.40	0.44	1.7

*) The saturation current value (Idc1) is the DC current value having inductance decrease down to 30 %. (at 20 ℃)
*) The temperature rise current value (Idc2) is the DC current value having temperature increase up to 40 ℃.(at 20℃)
*) The rated current value is following either Idc1 or Idc2, which is the lower one.

1. Dimensions

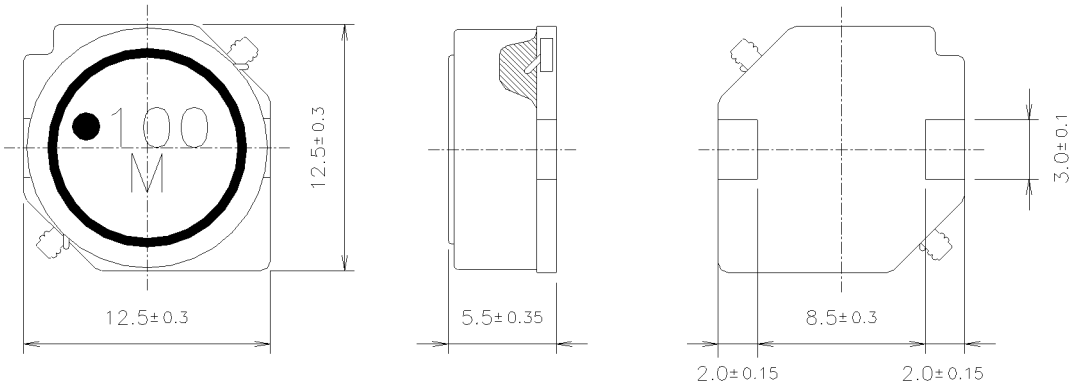

Unit: mm

2. Shape

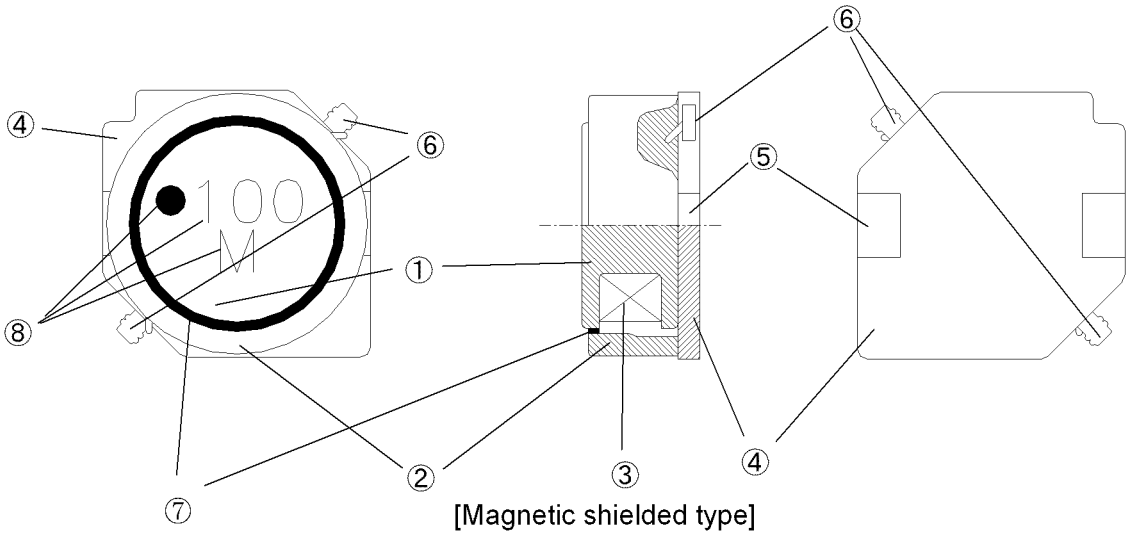

[Magnetic shielded type]

① Drum core	Ferrite(Ni-Zn)
② Ring core	Ferrite(Ni-Zn)
③ Winding wire	Polyurethane copper wire
④ Base	Liquid crystal polymer
⑤ Terminal	Copper (Ni and Sn plated)
⑥ Solder	Lead free (Sn 99.99 %)
⑦ Adhesive	Epoxy resin
⑧ Ink	Phenol resin

Marking formats

〈Example〉

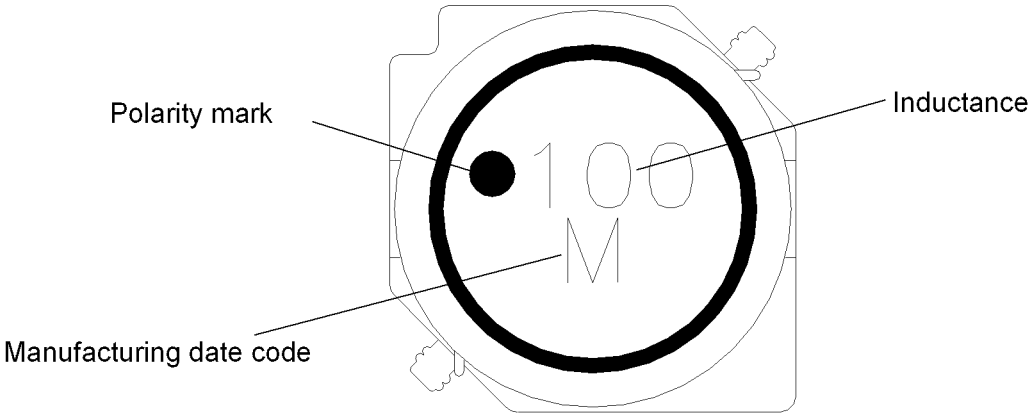

Table: Manufacturing date code

Year \ Month		1	2	3	4	5	6	7	8	9	10	11	12
2009	2013	A	B	C	D	E	F	G	H	J	K	L	M
2010	2014	N	P	Q	R	S	T	U	V	W	X	Y	Z
2011	2015	a	b	c	d	e	f	g	h	j	k	l	m
2012	2016	n	p	q	r	s	t	u	v	w	x	y	z

* Capitals A-Z and small letters a-z indicate production month which go round in 4 years.
* It may differ from actual printing font.

	Item	Spec.	Test method
Electrical characteristics tests	Inductance	Table-1	LCR meter (Agilent 4285A or equivalent, 100 KHz, 1 V r.m.s.)
	DC resistance	Table-1	DC resistance meter (HIOKI 3227 or equivalent)
	Rated current	Table-1	The less value which is Idc1 or Idc2
	SRF	Table-1	Impedance material analyzer (Agilent 4291A or equivalent)
	Insulation resistance	100 MΩ minimum	DC 100 V voltage shall be applied for 1 minute between the top side of sample and the terminal.
	Dielectric withstanding voltage	No break of insulation	AC 100 V voltage shall be applied for 1 minute between the top side of sample and the terminal.
	Short time over load	No damage such as smoke or spark	2 times the rated current for 5 minutes.
	Temperature characteristics	Inductance change: Within±15 %	Measurement of inductance shall be taken at temperature range within -40 ℃ to +125 ℃. With reference to inductance value at +20 ℃, change rate shall be calculated.
Physical characterictics tests	Resistance to flexure of substrate	No damage	The test samples shall be soldered to the test board by the reflow soldering conditions show in Table 7. As illustrated below, apply force in the direction of the arrow indicating until deflection of the test board reaches to 2 mm. Test board size : 100 mm×40 mm×1.0 mm Test board material: glass epoxy-resin Solder paste thickness: 0.15 mm 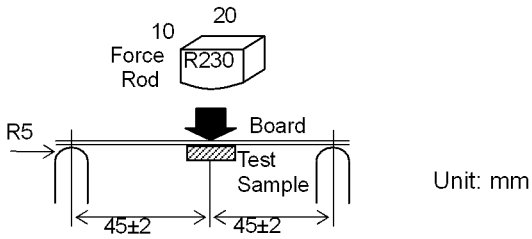
	Terminal strength	Shall not come off PC board	The test samples shall be soldered to the test board by the reflow soldering conditions shown in Table 7. Applied force: 10 N to X and Y directions. Duration: 5 s. Solder paste thickness: 0.15 mm 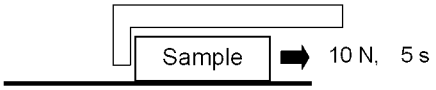
	Body strength	No damage	Applied force: 30 N Duration: 10 s 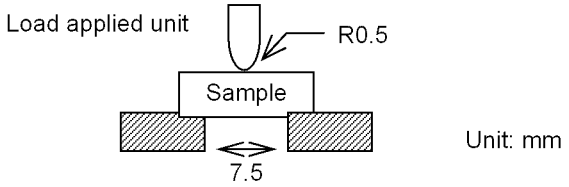

	Item	Spec.	Test method
Physical characterictics tests	Resistance to vibration	Inductance change: Within±10 % No significant abnormality in appearance.	The test samples shall be soldered to the test board by the reflow soldering conditions shown in Table 7. Then it shall be submitted to below test conditions. Frequency range :10 Hz to 55 Hz Total Amplitude :1.5 mm :(May not exceed acceleration 196 m/S^2) Sweeping Method :10 Hz to 55 Hz to 10 Hz for 1 min. Time :For 2 hours on each X, Y, and Z axis.
	Resistance to shock	Inductance change: Within±10 % No significant abnormality in appearance.	The test samples shall be soldered to the test board by the reflow soldering conditions shown in Table 7. Then it shall be submitted to below test conditions. Acceleration :1000 m/s^2 Duration :6 msec (Half sine pulse) Direction :+X、+Y、+Z、-X、-Y、-Z Number of time :Each 3 times, Total 18 times
	Resistance to soldering heat (Reflow)	Inductance change: Within±10 % No significant abnormality in appearance.	The test sample shall be exposed to reflow oven at 230±5 ℃ for 40 seconds, with peak temperature at 260±5 ℃ for 5 seconds, 2 times. Test board thickness :1.0 mm Test board material :glass epoxy-resin
	Solderability	At least 90 % of surface of terminal electrode is covered by new solder.	The test samples shall be dipped in flux, and then immersed in molten solder as shown in below table. Flux: Methanol solution containing rosin 25 %. Solder :Pb free（Sn-3Ag-0.5Cu） Solder temperature :245±5 ℃ Immersing time :5±1.0 sec Immersing speed :25 mm/s
Environmental tests	Thermal shock	Inductance change: Within±10 % No significant abnormality in appearance.	The test samples shall be soldered to the test board by the reflow soldering conditions shown in Table 7. The test samples shall be placed at specified temperature and specified time by following condition. The temperature cycle shall be repeated 100 cycles. 1 cycle condition :-40 ℃/30 min ⇔ 85 ℃/30 min
	Low temperature Life test	Inductance change: Within±10 % No significant abnormality in appearance.	The test samples shall be soldered to the test board by the reflow soldering conditions shown in Table 7. The test samples shall be placed in thermostatic oven set at specified temperature and applied the rated current continuously as shown in below table. Temperature :-40±3 ℃ Time :500+24/-0 hours

	Item	Spec.	Test method
Environmental tests	Loading at high temperature life test	Inductance change: Within±10 % No significant abnormality in appearance.	The test samples shall be soldered to the test board by the reflow soldering conditions shown in Table 7. The test samples shall be placed in thermostatic oven set at specified temperature and applied the rated current continuously as shown in below table. Temperature :85±2 ℃ Load current : Rated current (Refer to Table 1) Time :500+24/-0 hours
	Damp heat life test	Inductance change: Within±10 % No significant abnormality in appearance.	The test samples shall be soldered to the test board by the reflow soldering conditions shown in Table 7. The test samples shall be placed in thermostatic oven set at specified temperature and humidity as shown in below table. Temperature :60±2 ℃ Relative humidity :90～95 %RH Time :500+24/-0 hours
	Loading under damp heat life test	Inductance change: Within±10 % No significant abnormality in appearance.	The test samples shall be soldered to the test board by the reflow soldering conditions shown in Table 7. The test samples shall be placed in thermostatic oven set at specified temperature and applied the rated current continuously as shown in below table. Temperature :60±2 ℃ Relative humidity :90～95 %RH Load current : Rated current (Refer to Table 1) Time :500+24/-0 hours

Standard measuring condition	Unless otherwise specified, the test samples are placed at room temperature and humidity at least 2 hours, and measured within 48 hours after exposure to test conditions.

1. Taping dimensions

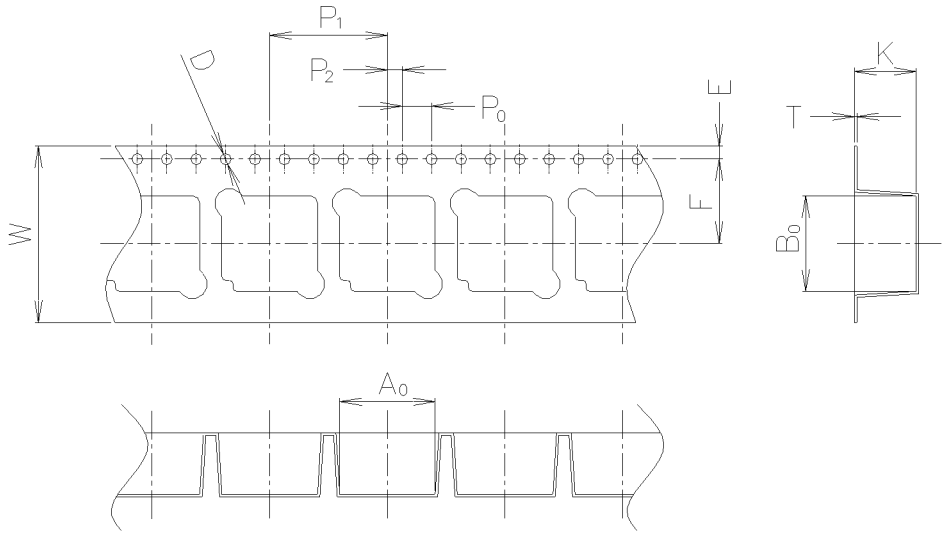

Unit: mm

A_0	B_0	W	F	E	P_1	P_2	P_0	D	T	K
13.0 ±0.1	13.0 ±0.1	24.0 ±0.3	11.5 ±0.1	1.75 ±0.1	16.0 ±0.1	2.0 ±0.1	4.0 ±0.1	φ1.5 +0.1 −0	0.4 ±0.1	6.1 ±0.1

2. Leader and blank position

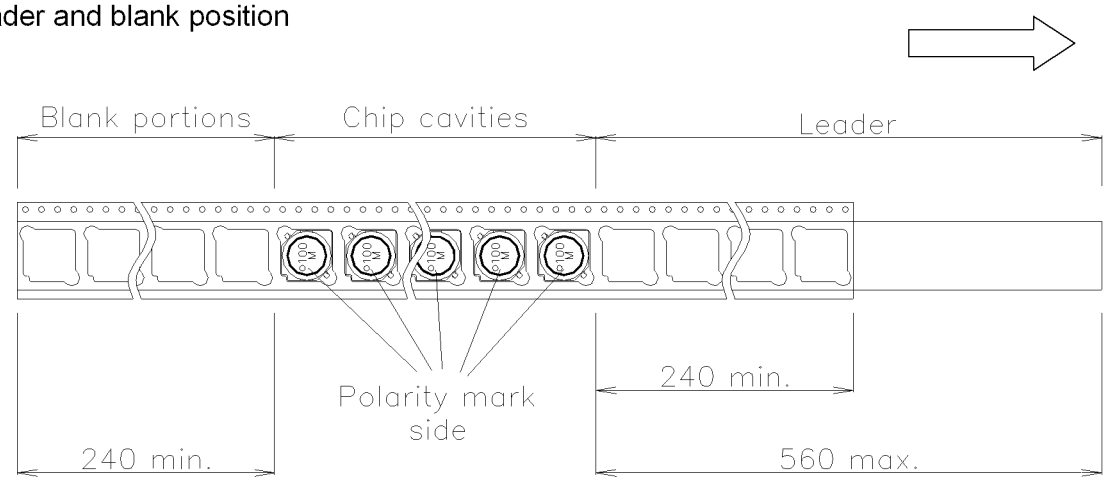

Unit: mm

3. Top tape strength

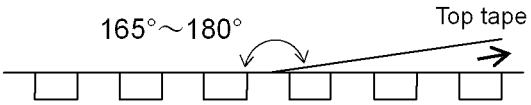

Peel-off force :0.1 N～1.3 N
Peel-off angle :165°～180°
Peel-off speed :300 mm/min

1. Dimension of reel

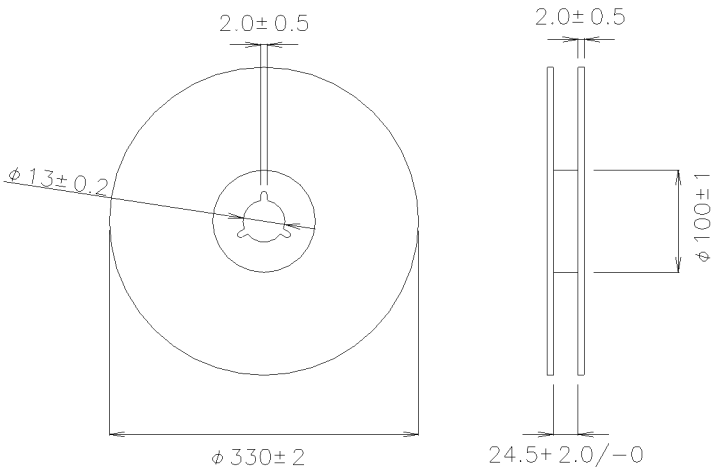

Unit: mm

2. Quantity 500pcs/ reel

3. The allowable number of empty chip cavities
   Maximum two (2) chip cavities missing product may exist in a reel but they may not be consecutive two cavities.

4. Marking
   The following items shall be marked legibly on per tape & reel package.

   (1) Part number of Taiyo Yuden Co., Ltd.
   (2) Supplier name (Taiyo Yuden Co., Ltd.)
   (3) Lot number
   (4) Date (stamp)
   (5) Quantity
   (6) Country of origin

5. Dimensions of packing box

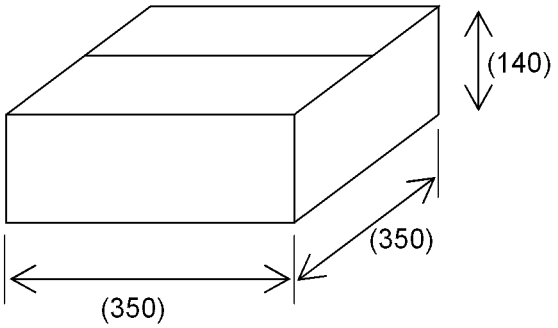

Unit: mm

2 000 pcs/ carton
4 reels/ carton

6. Unit of minimum order 2000 pcs (1 carton)

Reflow condition(Pb free solder)

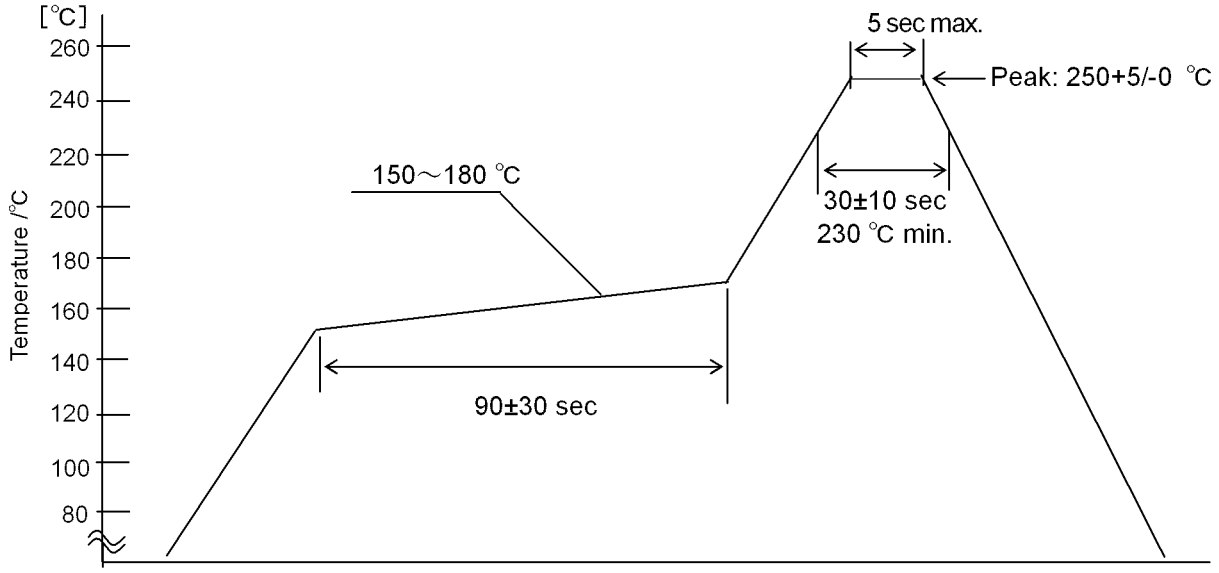

The products may be exposed to reflow soldering process of above profile up to two times.

1. Surface mounting
   - Mounting and soldering conditions should be checked beforehand.
   - Applicable soldering process to this products is reflow soldering only.
   - Recommended Land-Pattern :

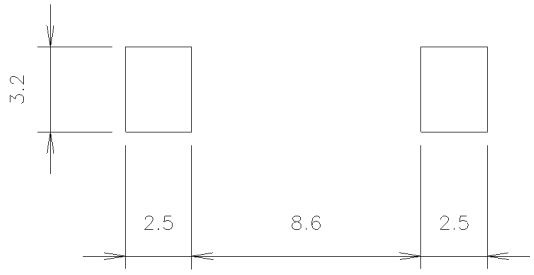

Unit: mm

2. Handling

   Keep the products away from all magnets and magnetic objects.
   Be careful not to subject the products to excessive mechanical shocks.
   Please avoid applying impact to the products after mounted on pc board.
   Avoid ultrasonic cleaning.

3. Storage

   To prevent deterioration of the solderability of terminal electrodes and/or the packing materials of the products, please store the products under following storage conditions.

Ambient temperature range	-5 ℃ to 40 ℃
Humidity	70 % RH maximum

   Even under the ideal storage conditions, solderability of inductor's electrode deteriorates as time passes, so inductors should be used within 6 months after the delivery time.

4. Regarding Regulations

   Any Class−I or Class−II ozone-depleting substance (ODS) listed in the Clean Air Act in US for regulation is not included in the products or applied to the products at any stage of whose manufacturing processes.
   Certain brominated flame retardants (PBBs, PBDEs) are not used at all.

5. RoHS compliance

   This product conforms to "RoHS compliance".

6. Country of origin

   China or Philippine
   (UNITED ELECTRONICS CO., LTD. DONGGUAN TAIYO YUDEN CO., LTD.
   TAIYO YUDEN (TIANJIN) ELECTRONICS CO., LTD.)
   (TAIYO YUDEN (PHILIPPINES) INC.)

7. Guarantee

   The operating conditions for the guarantee of this product are as shown in the drawing for specification.
   Please note that Taiyo Yuden Co., Ltd. shall not be responsible for a failure and /or abnormality which is caused by use under the conditions other than the aforesaid operating conditions.

This English version of the specifications is made out by translating the Japanese original into English faithfully, but in case where any inconsistency or difference exists, the Japanese original shall govern.

[SPECIAL NOTICE]

■All of the contents specified here are subject to change without notice due to technical improvements, etc. Therefore, please check latest version of the components specifications carefully before practical application or usage of the components.
Please note that Taiyo Yuden Co., Ltd. shall not be responsible for any defects in products or equipment incorporating such products, which are caused under the conditions other than those specified in this specification or individual specification.

■Please conduct validation and verification of products in actual condition of mounting and operating environment before commercial shipment of the equipment.

■All electronic components in this specification are developed, designed and intended for use in general electronics equipment.(for AV, office automation, household, office supply, information service, telecommunications, (such as mobile phone or PC) etc.).
Before incorporating the components or devices into any equipment in the field such as transportation,(automotive control, train control, ship control), transportation signal, disaster prevention, medical, public information network (telephone exchange, base station) etc. which may have direct influence to harm or injure a human body, please contact Taiyo Yuden Co., Ltd. for more detail in advance.
Do not incorporate the products into any equipment in fields such as aerospace, aviation, nuclear control, submarine system, military, etc. where higher safety and reliability are especially required.
In addition, even electronic components or functional modules that are used for the general electronic equipment, if the equipment or the electric circuit require high safety or reliability function or performances, a sufficient reliability evaluation check for safety shall be performed before commercial shipment and moreover, due consideration to install a protective circuit is strongly recommended at customer's design stage.

■The contents of this specification are applicable to the products which are purchased from our sales offices or distributors (so called “TAIYO YUDEN’s official sales channel”)
It is only applicable to the products purchased from any of TAIYO YUDEN’s official sales channel.

■Please note that Taiyo Yuden Co., Ltd. shall have no responsibility for any controversies or disputes that may occur in connection with a third party's intellectual property rights and other related rights arising from your usage of products in this specification. Taiyo Yuden Co., Ltd. grants no license for such rights.