Apr.1.2017 Copyright 2017 HIROSE ELECTRIC CO., LTD. All Rights Reserved.

COUNT	DESCRIPTION OF REVISIONS	BY	CHKD	DATE	COUNT	DESCRIPTION OF REVISIONS	BY	CHKD	DATE
				. .					. .
				. .					. .
				. .					. .

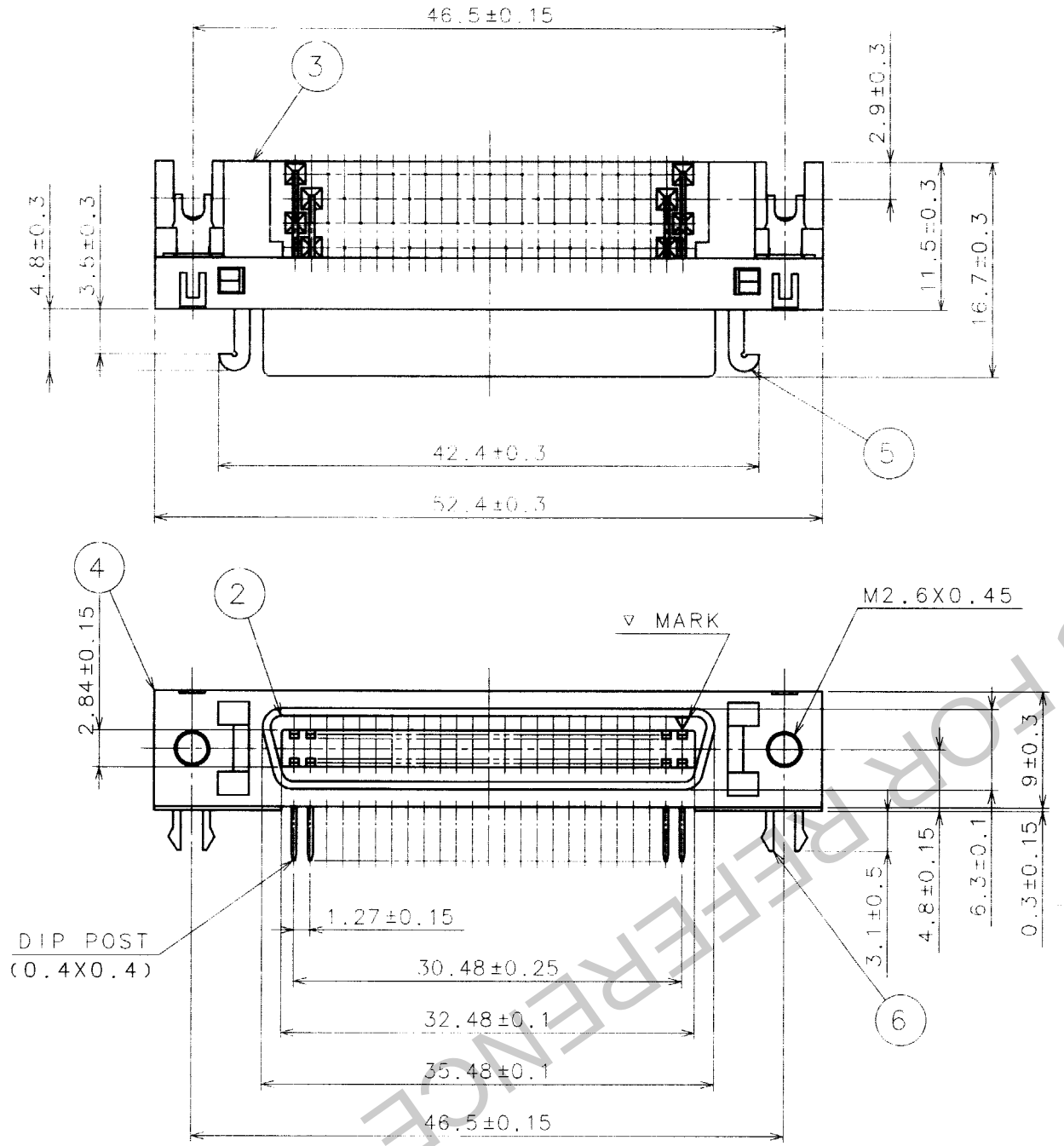

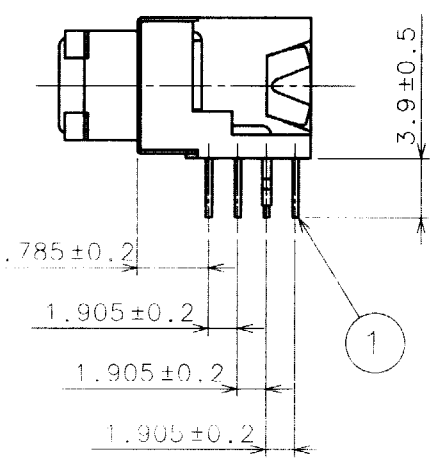

MOUNTED CONNECTOR ON PCB

(PCB THICKNESS 1.6mm)

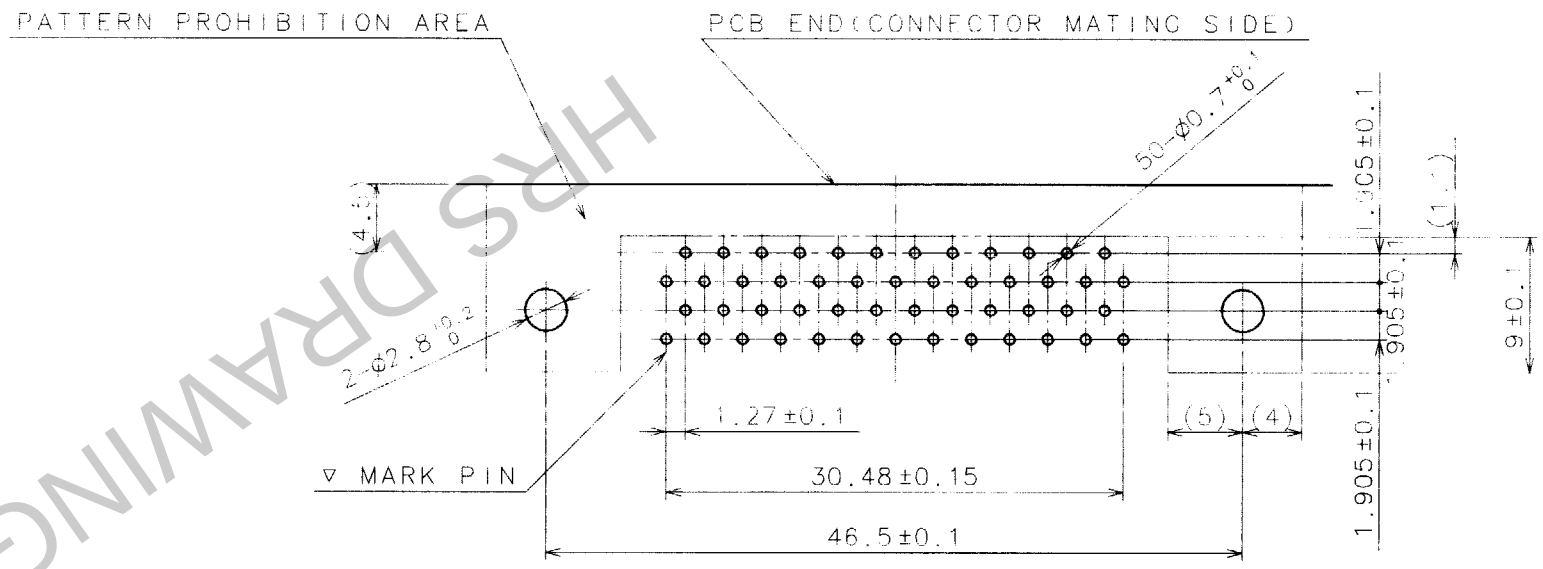

PANEL CUTOUT

(PANEL THICKNESS SHALL BE 1.6mm MAX.)

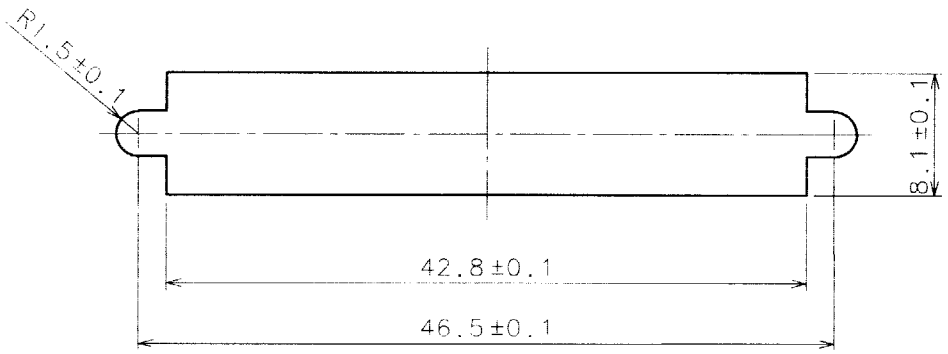

NO.	MATERIAL	FINISH, REMARKS	NO.	MATERIAL	FINISH, REMARKS
3	PBT	(BLACK)UL94V-0	6	BRASS	TIN PLATING
2	PBT	(BLACK)UL94V-0	5	STEEL	NICKEL PLATING
1	PHOSPHOR BRONZE	SELECTIVE GOLD FLASH PLATING	4	STEEL	NICKEL PLATING

CODE NO.(OLD)	DRAWN	DESIGNED	CHECKED	APPROVED	RELEASED
	T. Hamzya 03.10.10	T. Hamzya 03.10.10	Y. Enami 03.10.15	H. Miwa 03.10.15	

SCALE 2 : 1

UNITS mm

DRAWING NO. EDC3-120261-01

HRS HIROSE ELECTRIC CO.,LTD.

PART NO. DX10G1M-50SE(50)

CODE NO. CL230-5214-0-50

1/1

FORM NO.229

TO
Q

HRS DRAWING FOR REFERENCE