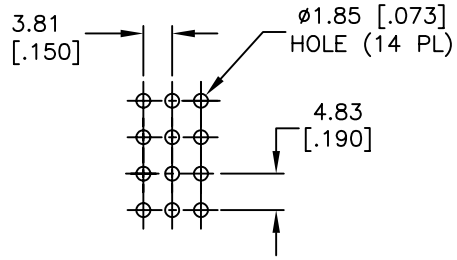

RECOMMENDED P.C.B. LAYOUT
SCALE 1X

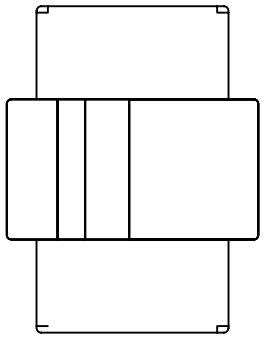

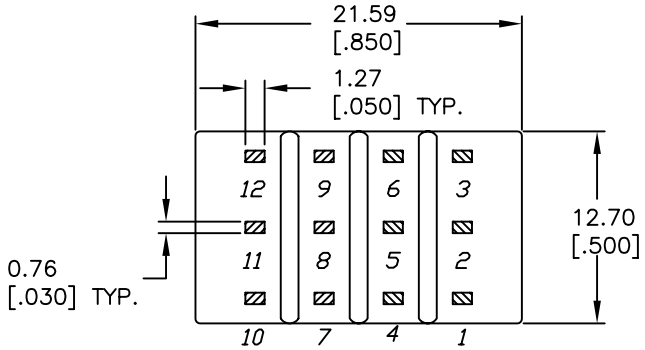

SECTION A-A

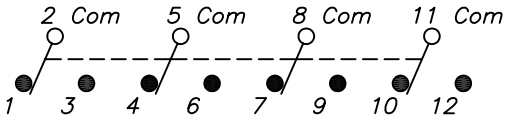

CIRCUIT: 4PDT

SWITCH FUNCTION		
POS. 1	POS. 2	POS. 3
ON	NONE	(ON)
2-3,5-6 8-9,11-12	OPEN	2-1, 5-4 8,7 11-10

(ON) = MOMENTARY

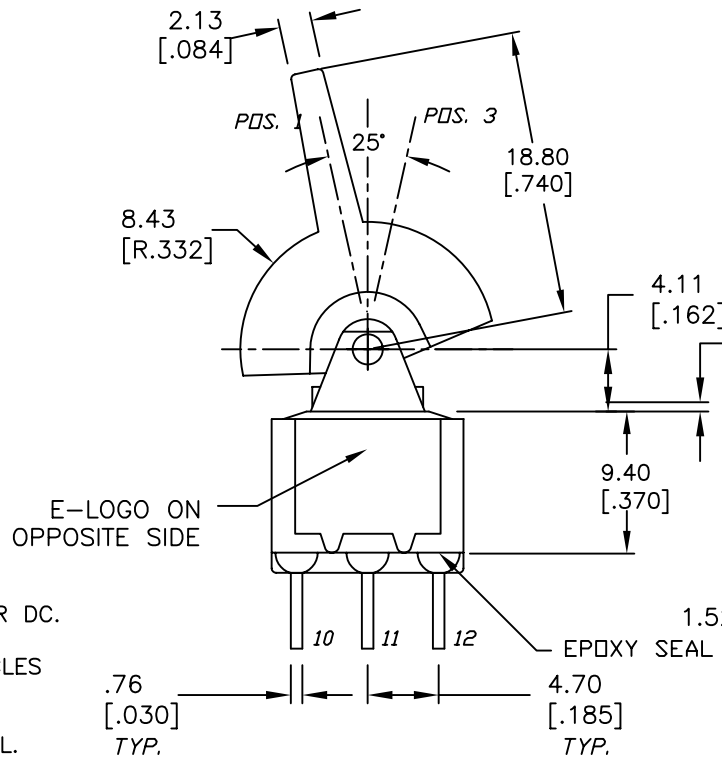

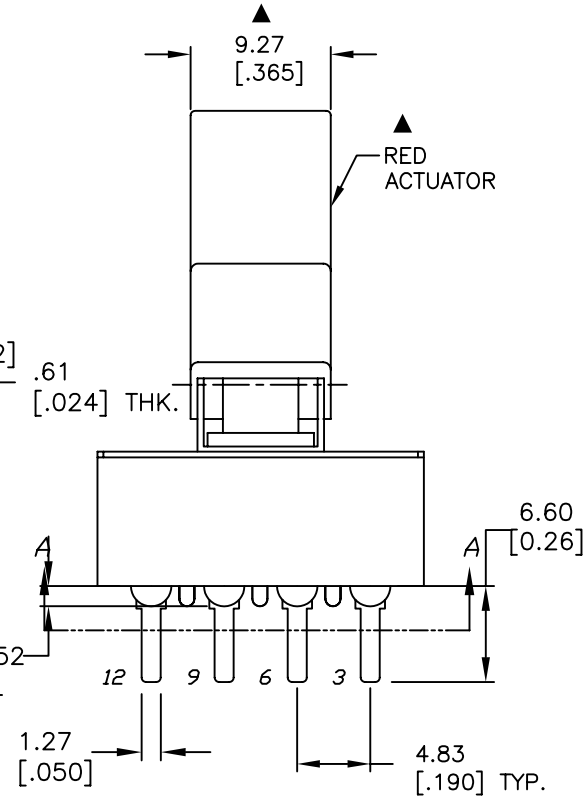

NOTES:

1. ALL DIMENSIONS IN MM [INCH]
2. GENERAL TOLERANCE: X.X=±0.4
   X.XX=±0.25
3. TERM. NOS. FOR REF. ONLY
4. RATING: 0.4 VOLT-AMPS MAX. @20V MAX. AC OR DC.
5. ▲ CONTACT MATERIAL: GOLD PLATING.
6. ELECTRICAL LIFE: 40,000 MAKE-AND-BREAK CYCLES AT FULL LOAD.
7. INSULATION RESISTANCE: 1,000M OHM MIN.
8. DIELECTRIC STRENGTH: 1,000 V RMS @SEA LEVEL.
9. OPERATING TEMP.: -30°C to 85°C
10. ▲ DENOTES CRITICAL PARAMETER.
11. 2002/95/EC (ROHS) COMPLIANT

REV.	ECN No.	DESCRIPTION	DATE	CHKD
B	17432	6.35 DIM TO 6.60, ADD NOTE 11.	7/3/07	TN
A	14170	RELEASED FOR PRODUCTION	7/16/04	AR

THE INFORMATION CONTAINED IN THIS DOCUMENT IS PROPRIETARY TO E-SWITCH AND IS NOT TO BE COPIED OR TRANSFERRED

E-SWITCH™

TITLE: 3004P2J2REDM2RE

SCALE	DATE	DR	DWG	REV
2:1	7/3/07	TN	T346013	B